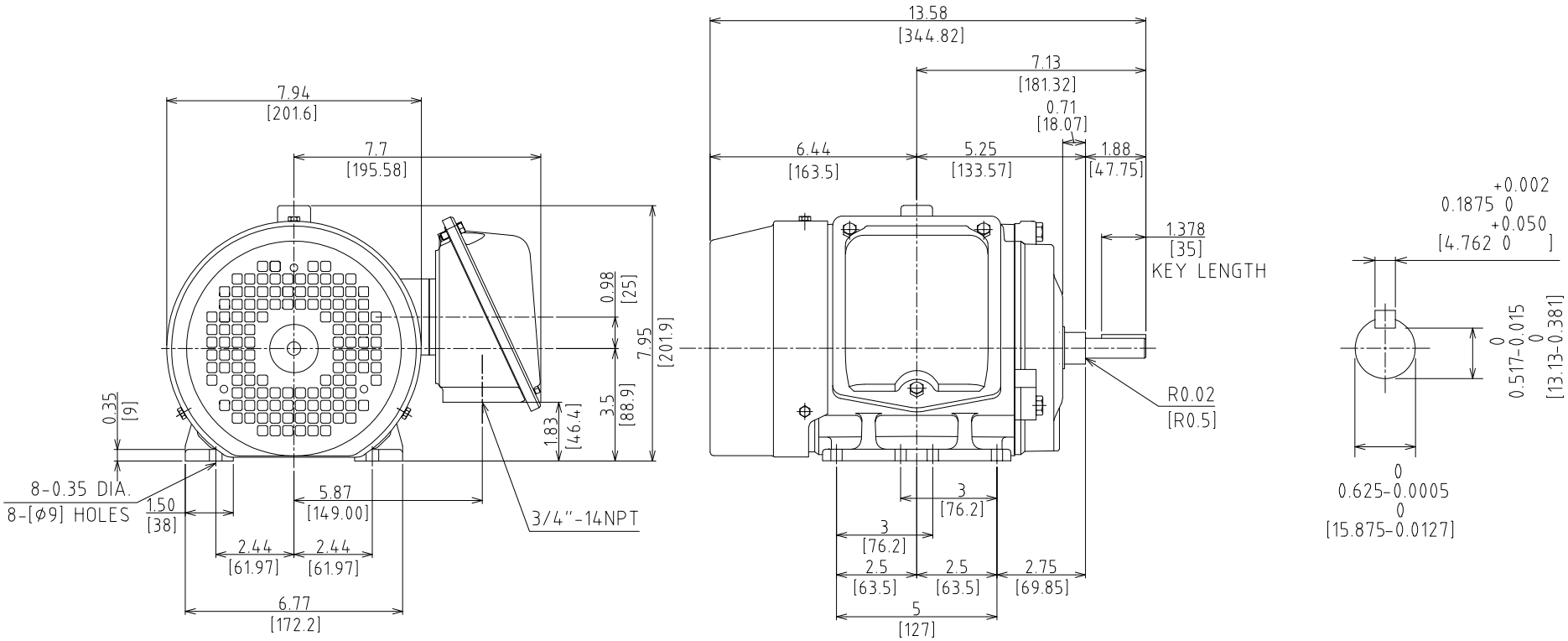


UNITS: INCHES

ROTATION FROM ODE

[X] CCW [ ] CW

NOTES:

1. MAIN CONDUIT BOX MAY BE ROTATED IN 90° INCREMENTS
2. STANDARD PRODUCT USES BI-DIRECTIONAL FAN. OPPOSITE ROTATION AVAILABLE ONLY BY CONNECTION CHANGE.
3. KEY DIMENSIONS EQUAL 0.1875"X0.1875"X1.378" (MOTOR SUPPLIED WITH KEY)

TOSHIBA RESERVES THE RIGHT TO MAKE CHANGES OF TECHNICAL IMPROVEMENT AND THE DATA MAY CHANGE WITHOUT NOTICE [ ] PRELIMINARY

DO NOT USE FOR CONSTRUCTION, INSTALLATION, OR APPLICATION PURPOSES UNLESS THE DRAWING IS MARKED AS CERTIFIED [X] CERTIFIED

TOSHIBA

www.toshiba.com/tic

TOSHIBA INTERNATIONAL CORPORATION

EQP Global SD

TOTALLY ENCLOSED FAN COOLED
HORIZONTAL FOOT MOUNT
3 PHASE INDUCTION MOTOR
56-56H F1 ASSEMBLY

DRAWING #: 3HFN000510/MDSLV125-01

REV. DATE: 02/14/20 REV. #: 2 PER.: -

REV. DESCRIP.: Remove old rev & KEY dimensions

| Issued Date | 9/19/2022 | Transmit # | |
|---|---|---|---|
| Issued By | dschoeck | Issued Rev | |

TOSHIBA
Leading Innovation >>>

# TYPICAL MOTOR PERFORMANCE DATA

**Model:** 0022SDSR41H-P

| HP | kW | Pole | FL RPM | Frame | Voltage | Hz | Phase | FL Amps |
|---|---|---|---|---|---|---|---|---|
| 2 | 1.5 | 2 | 3495 | 56 | 230/460 | 60 | 3 | 5.2/2.6 |
| **Enclosure** | **IP** | **Ins. Class** | **S.F.** | **Duty** | **NEMA Nom. Eff.** | **NEMA Design** | **kVA Code** | **Ambient (°C)** |
| TEFC | 55 | F | 1.15 | CONT | 85.5 | B | | 40 C |

| Load | HP | kW | Amperes | Efficiency (%) | Power Factor (%) |
|---|---|---|---|---|---|
| Full Load | 2.00 | 1.5 | 2.6 | 87.0 | 82.0 |
| ¾ Load | 1.50 | 1.1 | 2.1 | 86.3 | 76.1 |
| ½ Load | 1.00 | 0.7 | 1.7 | 83.2 | 64.0 |
| ¼ Load | 0.50 | 0.4 | 1.5 | 72.4 | 42.1 |
| No Load | | | 1.1 | | |
| Locked Rotor | | | 22 | | 55.8 |

| Torque | | | | Rotor wk² Inertia |
|---|---|---|---|---|
| Full Load (lb-ft) | Locked Rotor (% FLT) | Pull Up (% FLT) | Break Down (% FLT) | (lb-ft²) |
| 3.01 | 275 | 225 | 280 | 0.06 |

| Safe Stall Time(s) | | Sound Pressure dB(A) @ 1M | Bearings* | | Approx. Motor Weight |
|---|---|---|---|---|---|
| Cold | Hot | | DE | NDE | (lbs) |
| 32 | 15 | | 6305ZZ | 6305ZZ | 53 |

*Bearings are the only recommended spare part(s).

**Motor Options:**
Mounting:Footed,Shaft:56

| | |
|---|---|
| **Customer** | |
| **Customer PO** | |
| **Sales Order** | |
| **Project #** | |

**Tag:**

All characteristics are average expected values.

**TOSHIBA INTERNATIONAL CORPORATION · HOUSTON, TEXAS U.S.A.**

| | | | | | |
|---|---|---|---|---|---|
| Engineering | SPinzon | Doc. Written By | D. Suarez | Doc.# / Rev | MPCF-1119 / 0 |
| Engr. Date | 6/23/2022 | Doc. Approved By | M. Campbell | Doc. Issued | 6/8/2011 |

| Issued Date | 9/19/2022 | Transmit # | |
|---|---|---|---|
| Issued By | dschoeck | Issued Rev | |

TOSHIBA
Leading Innovation >>>

# TYPICAL MOTOR PERFORMANCE DATA

**Model:** 0022SDSR41H-P

| HP | kW | Pole | FL RPM | Frame | Voltage | Hz | Phase | FL Amps |
|---|---|---|---|---|---|---|---|---|
| 1.50 | 1.1 | 2 | 2900 | 56 | 190/380 | 50 | 3 | 4.8/2.4 |
| **Enclosure** | **IP** | **Ins. Class** | **S.F.** | **Duty** | **NEMA Nom. Eff.** | **NEMA Design** | **kVA Code** | **Ambient (°C)** |
| TEFC | 55 | F | 1.0 | CONT | 82.7 | B | | 40 C |

| Load | HP | kW | Amperes | Efficiency (%) | Power Factor (%) |
|---|---|---|---|---|---|
| Full Load | 1.50 | 1.1 | 2.4 | 85.3 | 82.0 |
| ¾ Load | 1.13 | 0.8 | 2.0 | 84.5 | 75.2 |
| ½ Load | 0.75 | 0.6 | 1.6 | 81.0 | 63.0 |
| ¼ Load | 0.38 | 0.3 | 1.4 | 69.3 | 41.7 |
| No Load | | | 1.1 | | |
| Locked Rotor | | | 19.0 | | 60.3 |

| Torque | | | | Rotor wk² Inertia |
|---|---|---|---|---|
| Full Load (lb-ft) | Locked Rotor (% FLT) | Pull Up (% FLT) | Break Down (% FLT) | (lb-ft²) |
| 2.72 | 290 | 225 | 280 | 0.06 |

| Safe Stall Time(s) | | Sound Pressure dB(A) @ 1M | Bearings* | | Approx. Motor Weight |
|---|---|---|---|---|---|
| Cold | Hot | | DE | NDE | (lbs) |
| 35 | 15 | | 6305ZZ | 6305ZZ | 53 |

*Bearings are the only recommended spare part(s).

**Motor Options:**
Mounting:Footed,Shaft:56

| | |
|---|---|
| **Customer** | |
| **Customer PO** | |
| **Sales Order** | |
| **Project #** | |

**Tag:**

All characteristics are average expected values.

**TOSHIBA INTERNATIONAL CORPORATION · HOUSTON, TEXAS U.S.A.**

| | | | | | |
|---|---|---|---|---|---|
| Engineering | SPinzon | Doc. Written By | D. Suarez | Doc.# / Rev | MPCF-1119 / 0 |
| Engr. Date | 6/23/2022 | Doc. Approved By | M. Campbell | Doc. Issued | 6/8/2011 |

| | | | |
|---|---|---|---|
| Issued Date | 9/19/2022 | Transmit # | |
| Issued By | dschoeck | Issued Rev | |

TOSHIBA
Leading Innovation >>>

# SPEED TORQUE/CURRENT CURVE

**Model:** 0022SDSR41H-P

| HP | kW | Pole | FL RPM | Frame | Voltage | Hz | Phase | FL Amps |
|---|---|---|---|---|---|---|---|---|
| 2 | 1.5 | 2 | 3495 | 56 | 230/460 | 60 | 3 | 5.2/2.6 |
| **Enclosure** | **IP** | **Ins. Class** | **S.F.** | **Duty** | **NEMA Nom. Eff.** | **NEMA Design** | **kVA Code** | **Ambient (°C)** |
| TEFC | 55 | F | 1.15 | CONT | 85.5 | B | | 40 C |

| Locked Rotor Amps | Rotor wk² Inertia (lb-ft²) | Torque | | | |
|---|---|---|---|---|---|
| | | Full Load (lb-ft) | Locked Rotor (%) | Pull Up (%) | Break Down (%) |
| 22 | 0.06 | 3.01 | 275 | 225 | 280 |

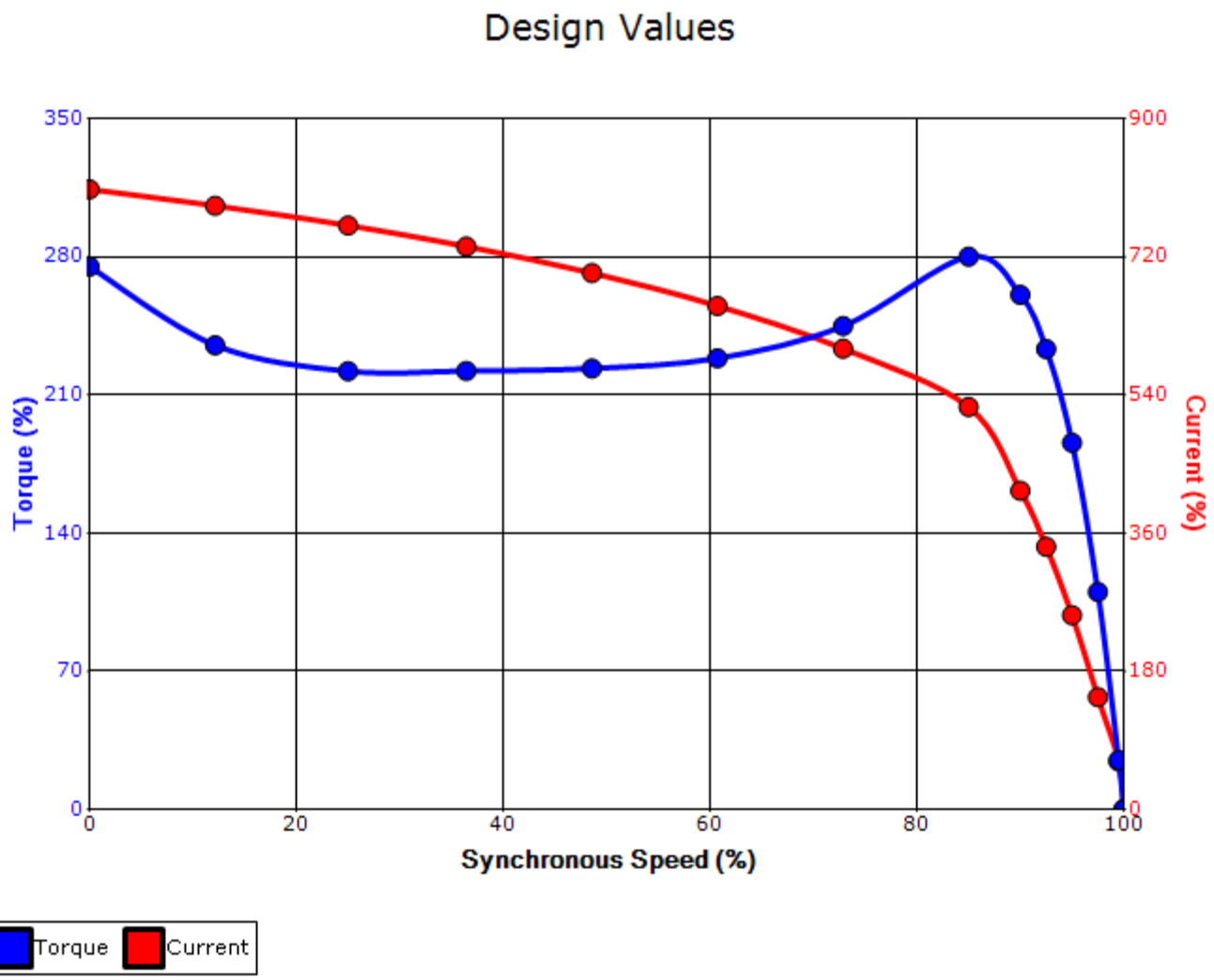


| | | | | |
|---|---|---|---|---|
| **Customer** | | | **wk² Load Inertia (lb-ft²)** | - |
| **Customer PO** | | | **Load Type** | - |
| **Sales Order** | | | **Voltage (%)** | 100 |
| **Project #** | | | **Accel. Time** | - |

**Tag:**

All characteristics are average expected values.

**TOSHIBA INTERNATIONAL CORPORATION · HOUSTON, TEXAS U.S.A.**

| | | | | | |
|---|---|---|---|---|---|
| **Engineering** | SPinzon | **Doc. Written By** | D. Suarez | **Doc.# / Rev** | MPCF-1121 / 0 |
| **Engr. Date** | 6/23/2022 | **Doc. Approved By** | M. Campbell | **Doc. Issued** | 6/8/2011 |

| | | | |
|---|---|---|---|
| Issued Date | 9/19/2022 | Transmit # | |
| Issued By | dschoeck | Issued Rev | |

TOSHIBA
Leading Innovation >>>

# SPEED TORQUE/CURRENT CURVE

**Model:** 0022SDSR41H-P

| HP | kW | Pole | FL RPM | Frame | Voltage | Hz | Phase | FL Amps |
|---|---|---|---|---|---|---|---|---|
| 1.50 | 1.1 | 2 | 2900 | 56 | 190/380 | 50 | 3 | 4.8/2.4 |
| **Enclosure** | **IP** | **Ins. Class** | **S.F.** | **Duty** | **NEMA Nom. Eff.** | **NEMA Design** | **kVA Code** | **Ambient (°C)** |
| TEFC | 55 | F | 1.0 | CONT | 82.7 | B | | 40 C |

| Locked Rotor Amps | Rotor wk² Inertia (lb-ft²) | Torque | | | |
|---|---|---|---|---|---|
| | | Full Load (lb-ft) | Locked Rotor (%) | Pull Up (%) | Break Down (%) |
| 19.0 | 0.06 | 2.72 | 290 | 225 | 280 |

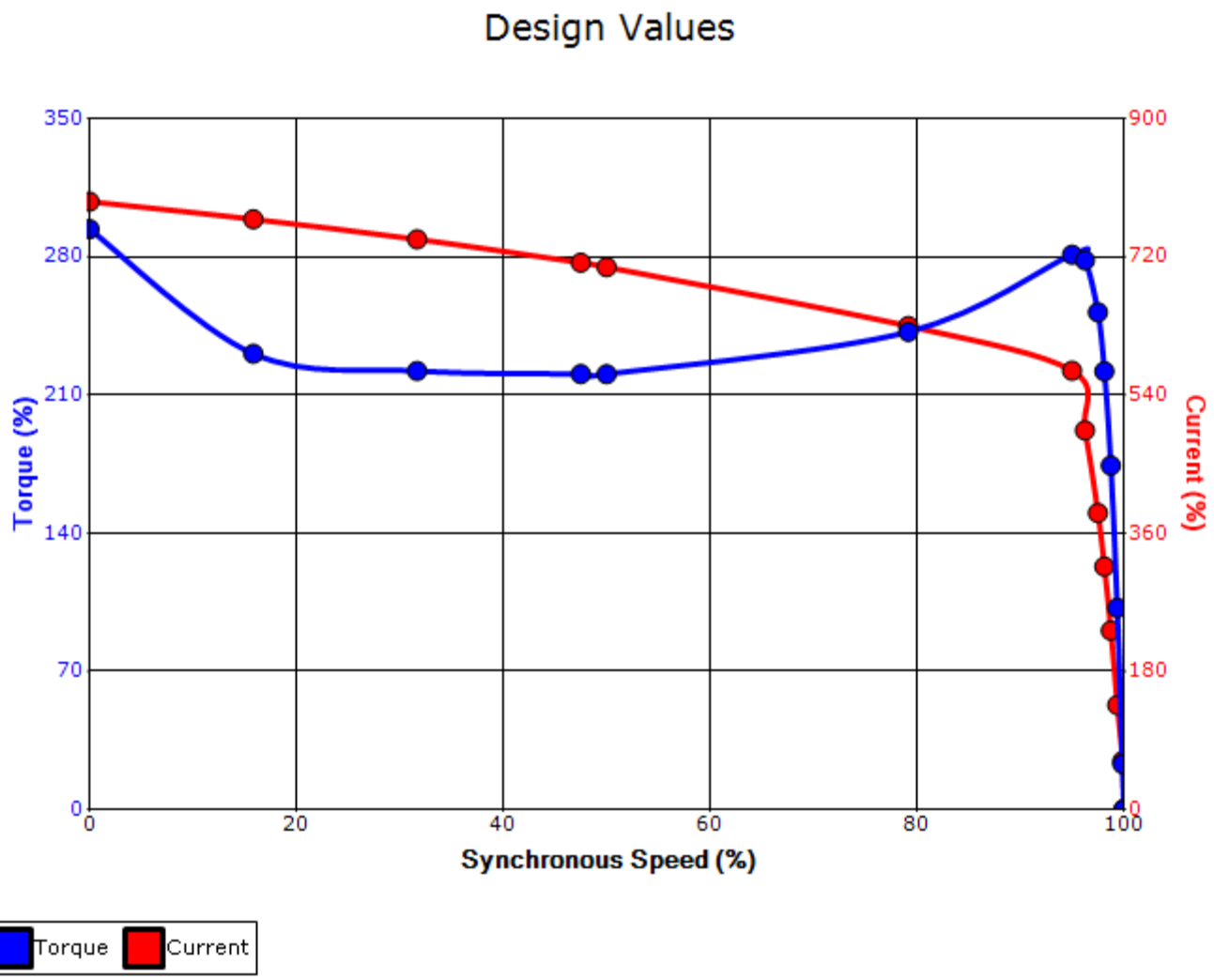


| | | | | |
|---|---|---|---|---|
| **Customer** | | | **wk² Load Inertia (lb-ft²)** | - |
| **Customer PO** | | | **Load Type** | - |
| **Sales Order** | | | **Voltage (%)** | 100 |
| **Project #** | | | **Accel. Time** | - |

**Tag:**

All characteristics are average expected values.

**TOSHIBA INTERNATIONAL CORPORATION · HOUSTON, TEXAS U.S.A.**

| | | | | | |
|---|---|---|---|---|---|
| **Engineering** | SPinzon | **Doc. Written By** | D. Suarez | **Doc.# / Rev** | MPCF-1121 / 0 |
| **Engr. Date** | 6/23/2022 | **Doc. Approved By** | M. Campbell | **Doc. Issued** | 6/8/2011 |

# Motor Connection Diagrams
## 9 Leads

Across-the-Line Starting / Running Connections

### Low Voltage Wye

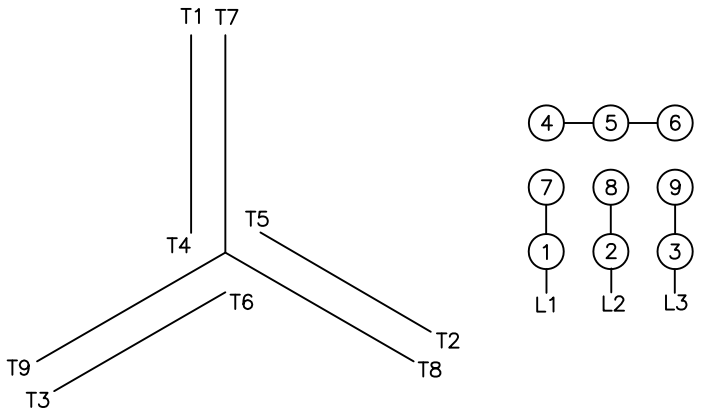


### High Voltage Wye

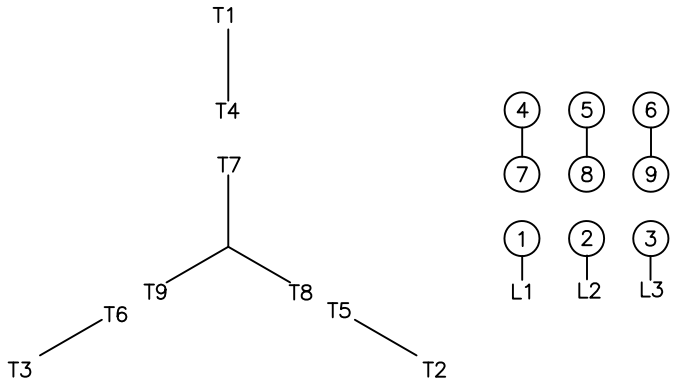


Switch L1 and L2 to reverse rotation