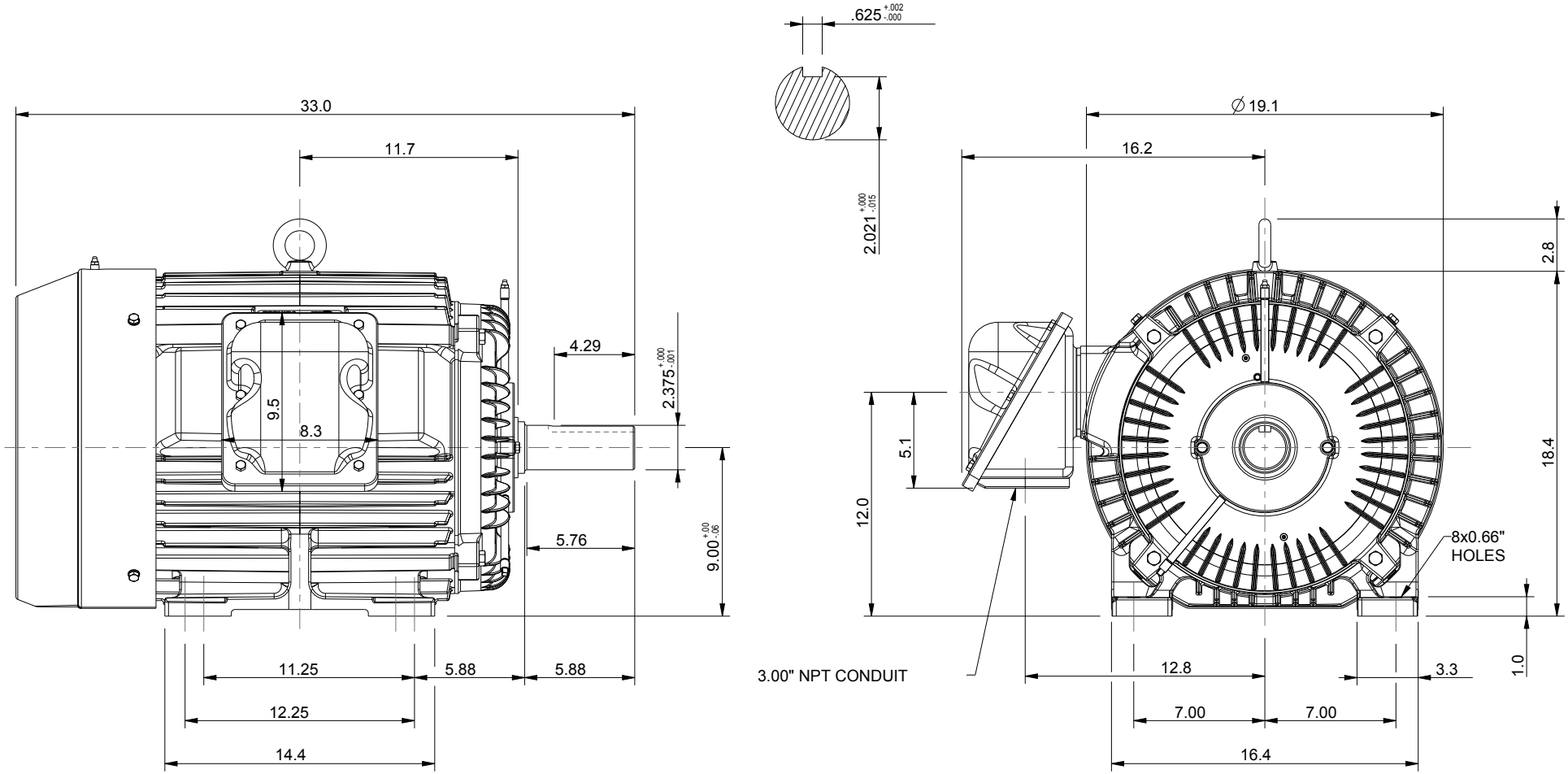

UNITS: INCHES

ROTATION FROM NDE

X CCW CW

NOTES:

1. MAIN CONDUIT BOX MAY BE ROTATED IN 90° INCREMENTS
2. STANDARD PRODUCT USES BI-DIRECTIONAL FAN. OPPOSITE ROTATION AVAILABLE ONLY BY CONNECTION CHANGE.
3. KEY DIMENSIONS EQUAL 0.625"x 0.625"x 4.25" (MOTOR SUPPLIED WITH KEY)

TOSHIBA RESERVES THE RIGHT TO MAKE CHANGES OF TECHNICAL IMPROVEMENT AND THE DATA MAY CHANGE WITHOUT NOTICE

[ ] PRELIMINARY

DO NOT USE FOR CONSTRUCTION, INSTALLATION, OR APPLICATION PURPOSES UNLESS THE DRAWING IS MARKED AS CERTIFIED

[X] CERTIFIED

TOSHIBA SEVERE DUTY EQP Global SD

www.toshiba.com/tic

TOSHIBA INTERNATIONAL CORPORATION

TOTALLY ENCLOSED FAN COOLED
HORIZONTAL FOOT MOUNTED
3 PHASE INDUCTION MOTOR
364T-365T F1 ASSEMBLY

DRAWING #: MDSLV001-07

REV. DATE: 07/11/18 REV. #: 2 PER.: M. O'DOWD

REV. DESCRIP.:

Issued Date	9/26/2022	Transmit #	
Issued By	dschoeck	Issued Rev	

TOSHIBA
Leading Innovation >>>

TYPICAL MOTOR PERFORMANCE DATA

Model: 0604SDSR41A-P

HP	kW	Pole	FL RPM	Frame	Voltage	Hz	Phase	FL Amps
60	45	4	1775	364T	230/460	60	3	138/69
Enclosure	**IP**	**Ins. Class**	**S.F.**	**Duty**	**NEMA Nom. Eff.**	**NEMA Design**	**kVA Code**	**Ambient (°C)**
TEFC	55	F	1.15	CONT	95.0	B		40 C

Load	HP	kW	Amperes	Efficiency (%)	Power Factor (%)
Full Load	60.00	44.7	69	95.1	87.3
¾ Load	45.00	33.6	52	94.6	85.8
½ Load	30.00	22.4	38	93.3	81.0
¼ Load	15.00	11.2	26	87.9	59.2
No Load			20.0		
Locked Rotor			435		25.8

Torque				Rotor wk² Inertia
Full Load (lb-ft)	Locked Rotor (% FLT)	Pull Up (% FLT)	Break Down (% FLT)	(lb-ft²)
178	160	135	270	16.80

Safe Stall Time(s)		Sound Pressure dB(A) @ 1M	Bearings*		Approx. Motor Weight
Cold	Hot		DE	NDE	(lbs)
35	15	-	6314ZC3	6312ZC3	819

*Bearings are the only recommended spare part(s).

Motor Options:
Product Family:EQP Global SD
Mounting:Footed,Shaft:T Shaft
Full Load Amps at 208: 153

Customer	
Customer PO	
Sales Order	
Project #	

Tag:

All characteristics are average expected values.

TOSHIBA INTERNATIONAL CORPORATION · HOUSTON, TEXAS U.S.A.

Engineering	jhock	**Doc. Written By**	D. Suarez	**Doc.# / Rev**	MPCF-1119 / 0
Engr. Date	3/28/2014	**Doc. Approved By**	M. Campbell	**Doc. Issued**	6/8/2011

Issued Date	9/26/2022	Transmit #	
Issued By	dschoeck	Issued Rev	

TOSHIBA
Leading Innovation >>>

TYPICAL MOTOR PERFORMANCE DATA

Model: 0604SDSR41A-P

HP	kW	Pole	FL RPM	Frame	Voltage	Hz	Phase	FL Amps
60	45	4	1470	364T	190/380	50	3	168/84
Enclosure	**IP**	**Ins. Class**	**S.F.**	**Duty**	**NEMA Nom. Eff.**	**NEMA Design**	**kVA Code**	**Ambient (°C)**
TEFC	55	F	1.0	CONT	94.1	B		40 C

Load	HP	kW	Amperes	Efficiency (%)	Power Factor (%)
Full Load	60.00	44.7	84	94.8	86.5
¾ Load	45.00	33.6	63	95.5	85.1
½ Load	30.00	22.4	44	95.6	80.4
¼ Load	15.00	11.2	29	89.1	64.7
No Load			19.3		
Locked Rotor			515		26.3

Torque				Rotor wk² Inertia
Full Load (lb-ft)	Locked Rotor (% FLT)	Pull Up (% FLT)	Break Down (% FLT)	(lb-ft²)
214	140	125	220	16.80

Safe Stall Time(s)		Sound Pressure dB(A) @ 1M	Bearings*		Approx. Motor Weight
Cold	Hot		DE	NDE	(lbs)
23	9	-	6314ZC3	6312ZC3	819

*Bearings are the only recommended spare part(s).

Motor Options:
Product Family:EQP Global SD
Mounting:Footed,Shaft:T Shaft

Customer	
Customer PO	
Sales Order	
Project #	

Tag:

All characteristics are average expected values.

TOSHIBA INTERNATIONAL CORPORATION · HOUSTON, TEXAS U.S.A.

Engineering	jhock	Doc. Written By	D. Suarez	Doc.# / Rev	MPCF-1119 / 0
Engr. Date	4/1/2014	Doc. Approved By	M. Campbell	Doc. Issued	6/8/2011

Issued Date	9/26/2022	Transmit #	
Issued By	dschoeck	Issued Rev	

TOSHIBA
Leading Innovation >>>

SPEED TORQUE/CURRENT CURVE

Model: 0604SDSR41A-P

HP	kW	Pole	FL RPM	Frame	Voltage	Hz	Phase	FL Amps
60	45	4	1775	364T	230/460	60	3	138/69
Enclosure	**IP**	**Ins. Class**	**S.F.**	**Duty**	**NEMA Nom. Eff.**	**NEMA Design**	**kVA Code**	**Ambient (°C)**
TEFC	55	F	1.15	CONT	95.0	B		40 C

Locked Rotor Amps	Rotor wk² Inertia (lb-ft²)	Torque			
		Full Load (lb-ft)	Locked Rotor (%)	Pull Up (%)	Break Down (%)
435	16.80	178	160	135	270

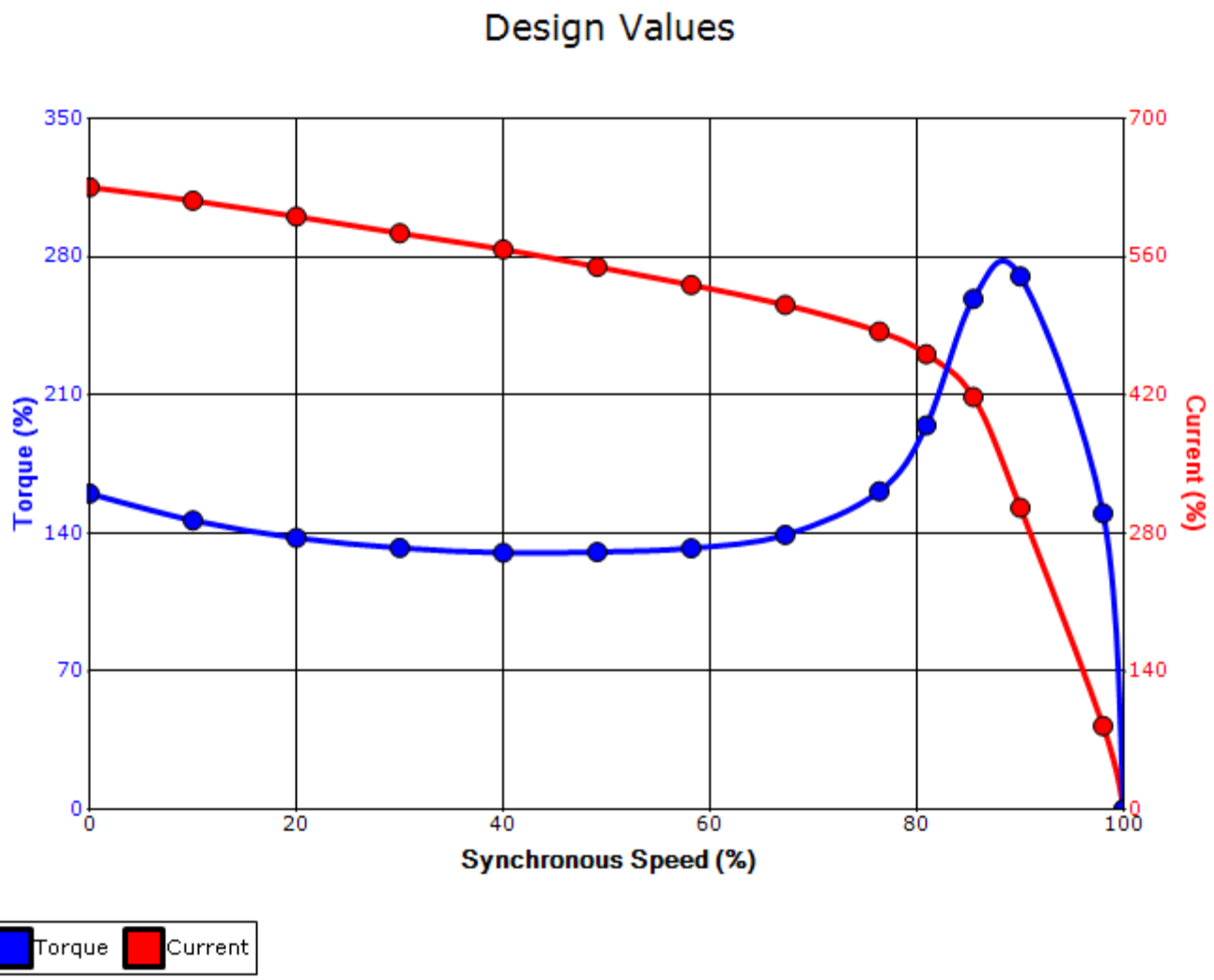

Customer			**wk² Load Inertia (lb-ft²)**	-
Customer PO			**Load Type**	-
Sales Order			**Voltage (%)**	100
Project #			**Accel. Time**	-

Tag:

All characteristics are average expected values.

TOSHIBA INTERNATIONAL CORPORATION · HOUSTON, TEXAS U.S.A.

Engineering	jhock	**Doc. Written By**	D. Suarez	**Doc.# / Rev**	MPCF-1121 / 0
Engr. Date	3/28/2014	**Doc. Approved By**	M. Campbell	**Doc. Issued**	6/8/2011

Issued Date	9/26/2022	Transmit #	
Issued By	dschoeck	Issued Rev	

TOSHIBA
Leading Innovation >>>

SPEED TORQUE/CURRENT CURVE

Model: 0604SDSR41A-P

HP	kW	Pole	FL RPM	Frame	Voltage	Hz	Phase	FL Amps
60	45	4	1470	364T	190/380	50	3	168/84
Enclosure	**IP**	**Ins. Class**	**S.F.**	**Duty**	**NEMA Nom. Eff.**	**NEMA Design**	**kVA Code**	**Ambient (°C)**
TEFC	55	F	1.0	CONT	94.1	B		40 C

Locked Rotor Amps	Rotor wk² Inertia (lb-ft²)	Torque			
		Full Load (lb-ft)	Locked Rotor (%)	Pull Up (%)	Break Down (%)
515	16.80	214	140	125	220

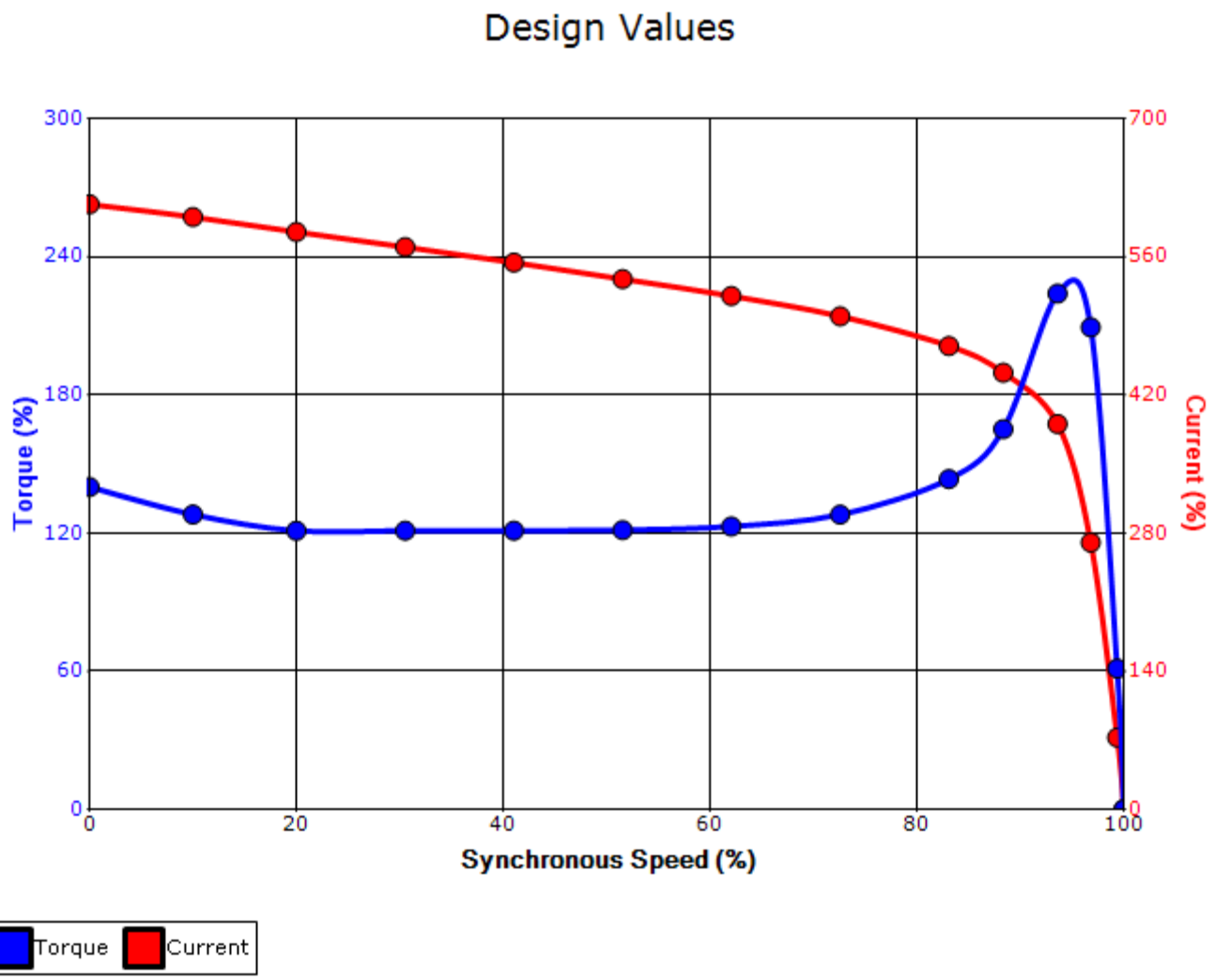

Customer			**wk² Load Inertia (lb-ft²)**	-
Customer PO			**Load Type**	-
Sales Order			**Voltage (%)**	100
Project #			**Accel. Time**	-

Tag:

All characteristics are average expected values.

TOSHIBA INTERNATIONAL CORPORATION · HOUSTON, TEXAS U.S.A.

Engineering	jhock	**Doc. Written By**	D. Suarez	**Doc.# / Rev**	MPCF-1121 / 0
Engr. Date	4/1/2014	**Doc. Approved By**	M. Campbell	**Doc. Issued**	6/8/2011

Motor Connection Diagrams
12 Leads

Across-the-Line Starting / Running Connections

Low Voltage Delta

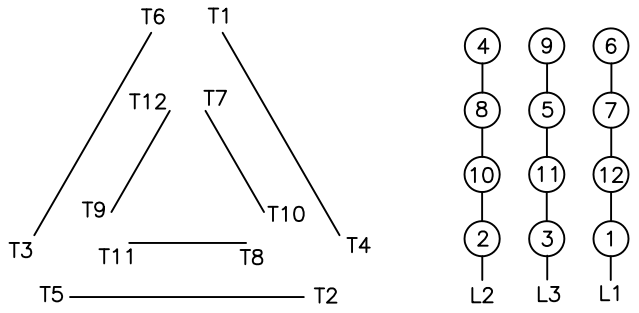

High Voltage Delta

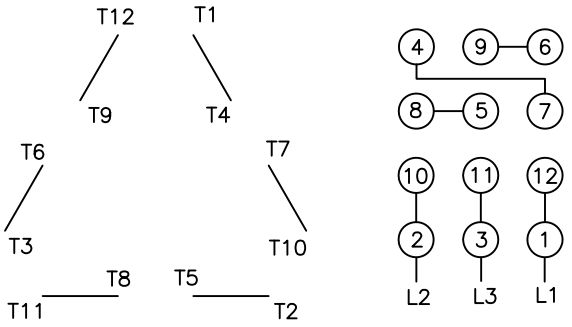

Switch L1 and L2 to reverse rotation

Suitable for Wye–Delta Starting and Limited Part–Winding–Starting.
Please Contact Toshiba International for specific connections.