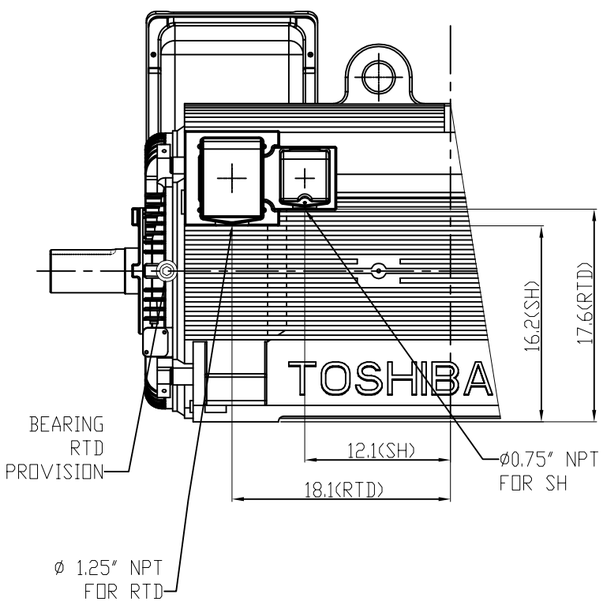

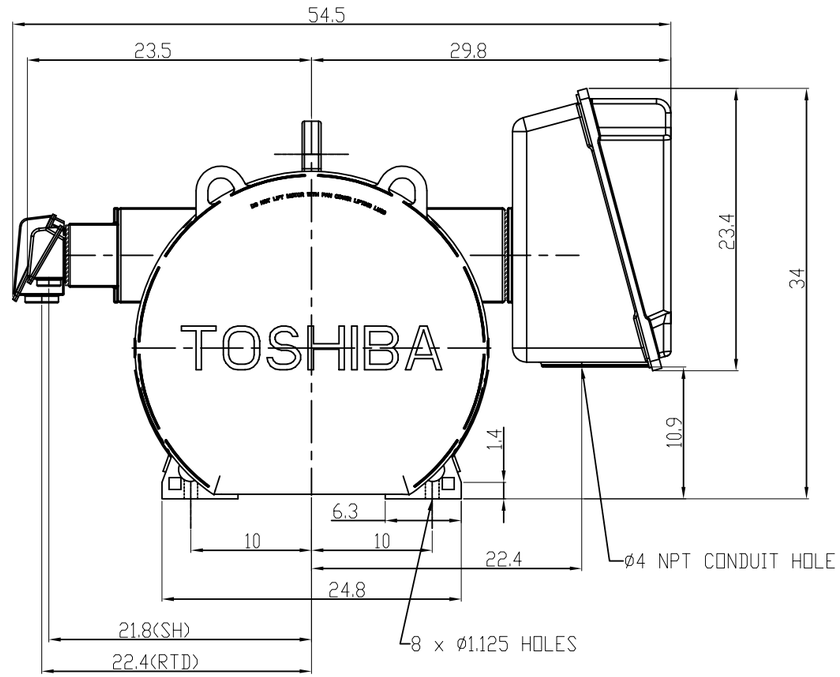

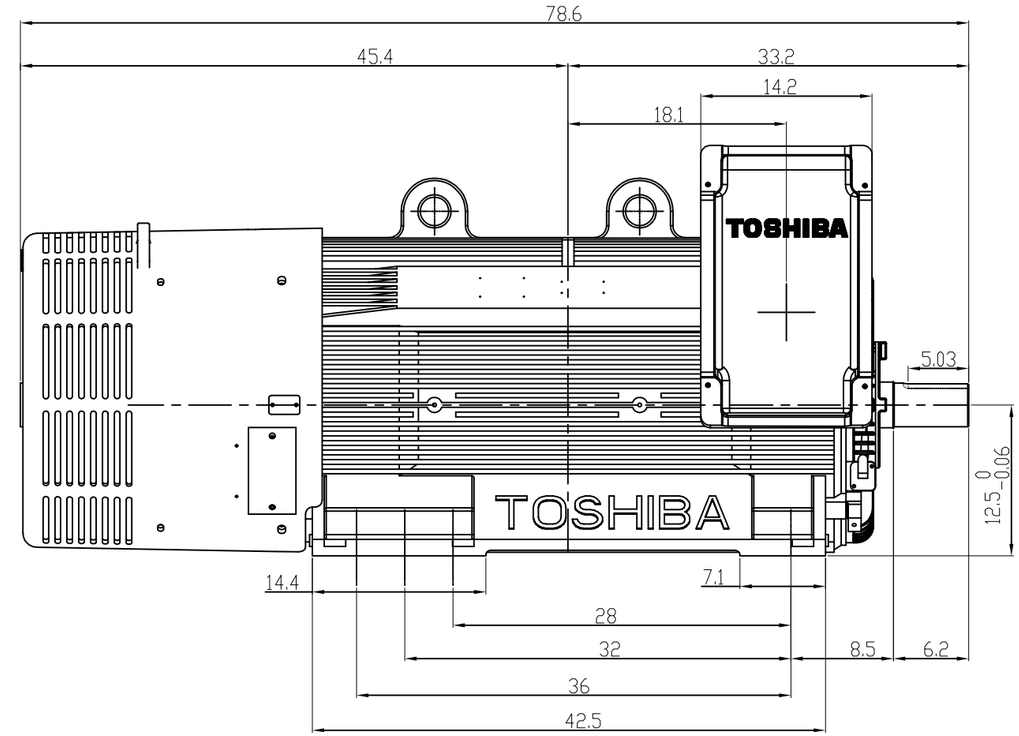

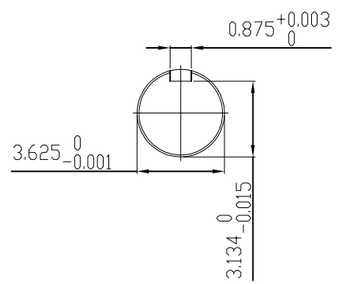

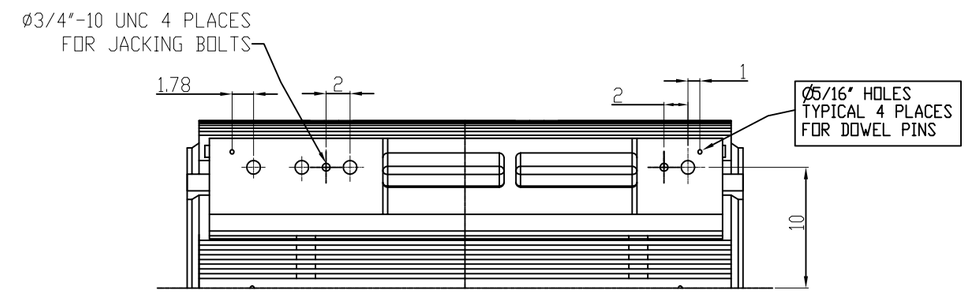

UNITS:INCHES

TECHNICAL INFORMATION

1. BEARING LUBRICATION DE: MOBIL POLYREX EM
   ODE: MOBIL POLYREX EM
2. BEARING TYPE DE: 6320C3
   ODE: 6320C3 INSULATED
3. WINDING TEMP. DETECTORS
   NUMBER AND TYPE: 6xRTD(Pt0°C-100ohm)
   LOCATION: IN STATOR SLOT
4. BEARING TEMP. DETECTORS
   NUMBER AND TYPE:
5. SPACE HEATER 1 PHASE
   VOLTS: 120 WATTS: 240
6. ROTATION: CCW VIEWED FROM NON DRIVE END
   THIS MOTOR IS BI DIRECTIONAL
7. MOTOR PAINT COLOR: GRAY
8. APPROX. WEIGHT: 5000 Lbs
9. ACCESORIES:

DRAWING LIST

MAIN TERMINAL BOX
130-7622-55

AUX TERMINAL BOX FOR	
SPACE HEATER	130-7520-50
R.T.D.	130-7522-51
THERMISTOR	N/A
PRODUCTION #	N/A

NO.	REVISION	BY	DATE
2	GRS FROM SRI, ADD DOWELS JACKING TO INLINE	RWS	1/6/14
1	CHG FAB. FC FOR C.I. FC	JMP	9/24/08
0	FIRST ISSUE	BCS	4/24/07

MOTOR OUTLINE FOR THREE PHASE INDUCTION MOTOR

CUSTOMER NAME	P.O. NO.	MOTOR TAG NO.

OUTPUT	POLE	VOLTAGE	FREQUENCY	FULL LOAD SPEED	TOSHIBA MODEL NO.
HP		V	Hz	(min^{-1})	

TYPE	FORM	INS. CLASS	RATING	FRAME	S.F.	ENCLOSURE
		F	CONT.	5011US		TEFC

TOSHIBA INTERNATIONAL CORPORATION
HOUSTON, TEXAS U.S.A.

3rd ANGLE PROJ.	PREPARED BY:	DATE:	CHECKED BY:	DATE:	DRAWING NO.:	REV.
	B SIDLE	4/24/07	S Johnson	4/26/07	MDSL0071-15	2

Issued Date	7/19/2021	Transmit #	
Issued By	dschoeck	Issued Rev	

TOSHIBA
Leading Innovation >>>

TYPICAL MOTOR PERFORMANCE DATA

Model: 3004FTAL11E-A

HP	kW	Pole	FL RPM	Frame	Voltage	Hz	Phase	FL Amps
300	224	4	1790	5011US	4000	60	3	42
Enclosure	**IP**	**Ins. Class**	**S.F.**	**Duty**	**NEMA Nom. Eff.**	**NEMA Design**	**kVA Code**	**Ambient (°C)**
TEFC	44	F	1.15	CONT	94.5	A		40 C

Load	HP	kW	Amperes	Efficiency (%)	Power Factor (%)
Full Load	300.00	223.7	42	94.4	81.0
¾ Load	225.00	167.8	33	93.6	77.1
½ Load	150.00	111.9	25	91.7	68.2
¼ Load	75.00	55.9	19.9	85.7	47.2
No Load			16.7		5.3
Locked Rotor			254		27.5

Torque				Rotor wk² Inertia
Full Load (lb-ft)	Locked Rotor (% FLT)	Pull Up (% FLT)	Break Down (% FLT)	(lb-ft²)
881	180	145	285	146.13

Safe Stall Time(s)		Sound Pressure dB(A) @ 1M	Bearings*		Approx. Motor Weight
Cold	Hot		DE	NDE	(lbs)
13	6	-	6320C3	6320C3 INS	4397

*Bearings are the only recommended spare part(s).

Motor Options:
Product Family:TEFC
Mounting:Footed,Shaft:US Shaft

Customer	
Customer PO	
Sales Order	
Project #	

Tag:

All characteristics are average expected values.

TOSHIBA INTERNATIONAL CORPORATION · HOUSTON, TEXAS U.S.A.

Engineering	bmammen	**Doc. Written By**	D. Suarez	**Doc.# / Rev**	MPCF-1119 / 0
Engr. Date	12/16/2014	**Doc. Approved By**	M. Campbell	**Doc. Issued**	6/8/2011

Issued Date	7/19/2021	Transmit #	
Issued By	dschoeck	Issued Rev	

TOSHIBA
Leading Innovation >>>

SPEED TORQUE/CURRENT CURVE

Model: 3004FTAL11E-A

HP	kW	Pole	FL RPM	Frame	Voltage	Hz	Phase	FL Amps
300	224	4	1790	5011US	4000	60	3	42
Enclosure	**IP**	**Ins. Class**	**S.F.**	**Duty**	**NEMA Nom. Eff.**	**NEMA Design**	**kVA Code**	**Ambient (°C)**
TEFC	44	F	1.15	CONT	94.5	A		40 C

Locked Rotor Amps	Rotor wk² Inertia (lb-ft²)	Torque			
		Full Load (lb-ft)	Locked Rotor (%)	Pull Up (%)	Break Down (%)
254	146.13	881	180	145	285

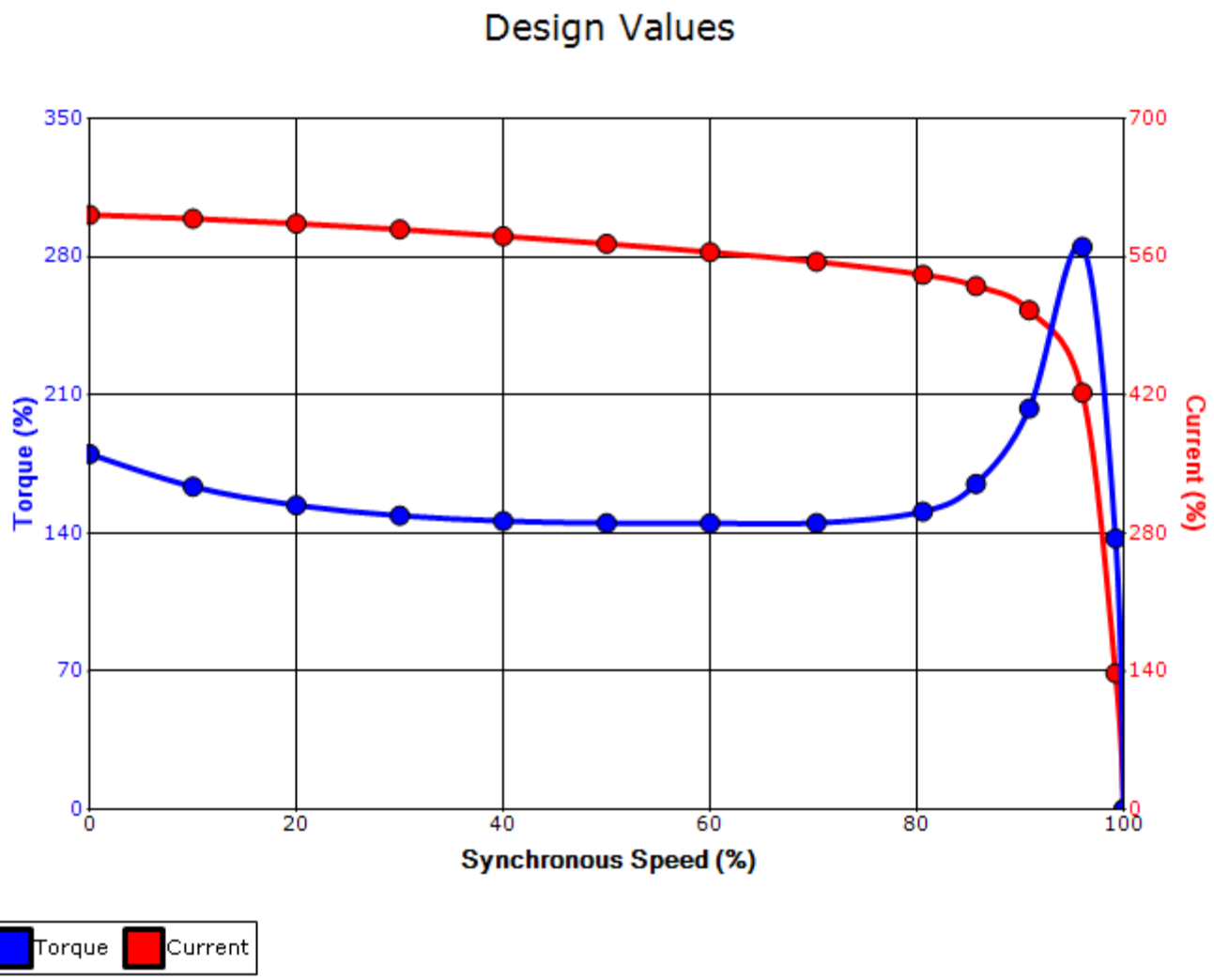

Customer			**wk² Load Inertia (lb-ft²)**	-
Customer PO			**Load Type**	-
Sales Order			**Voltage (%)**	100
Project #			**Accel. Time**	-

Tag:

All characteristics are average expected values.

TOSHIBA INTERNATIONAL CORPORATION · HOUSTON, TEXAS U.S.A.

Engineering	bmammen	**Doc. Written By**	D. Suarez	**Doc.# / Rev**	MPCF-1121 / 0
Engr. Date	12/16/2014	**Doc. Approved By**	M. Campbell	**Doc. Issued**	6/8/2011

Motor Connection Diagrams
6 Leads

Across the Line Starting / Run - Delta:

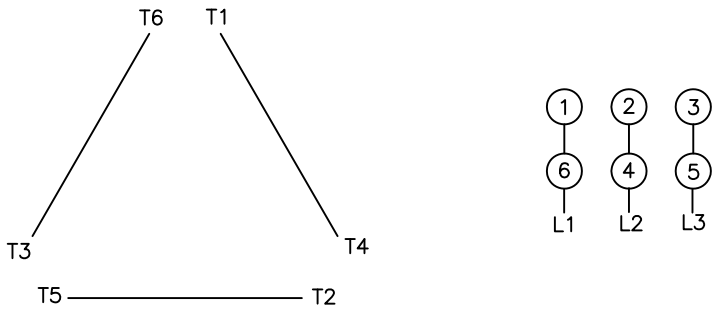

Alternate Starting Connection - Wye:

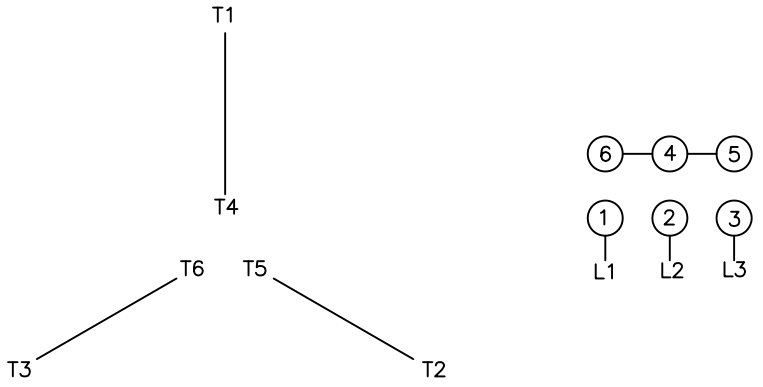

Switch L1 and L2 to reverse rotation