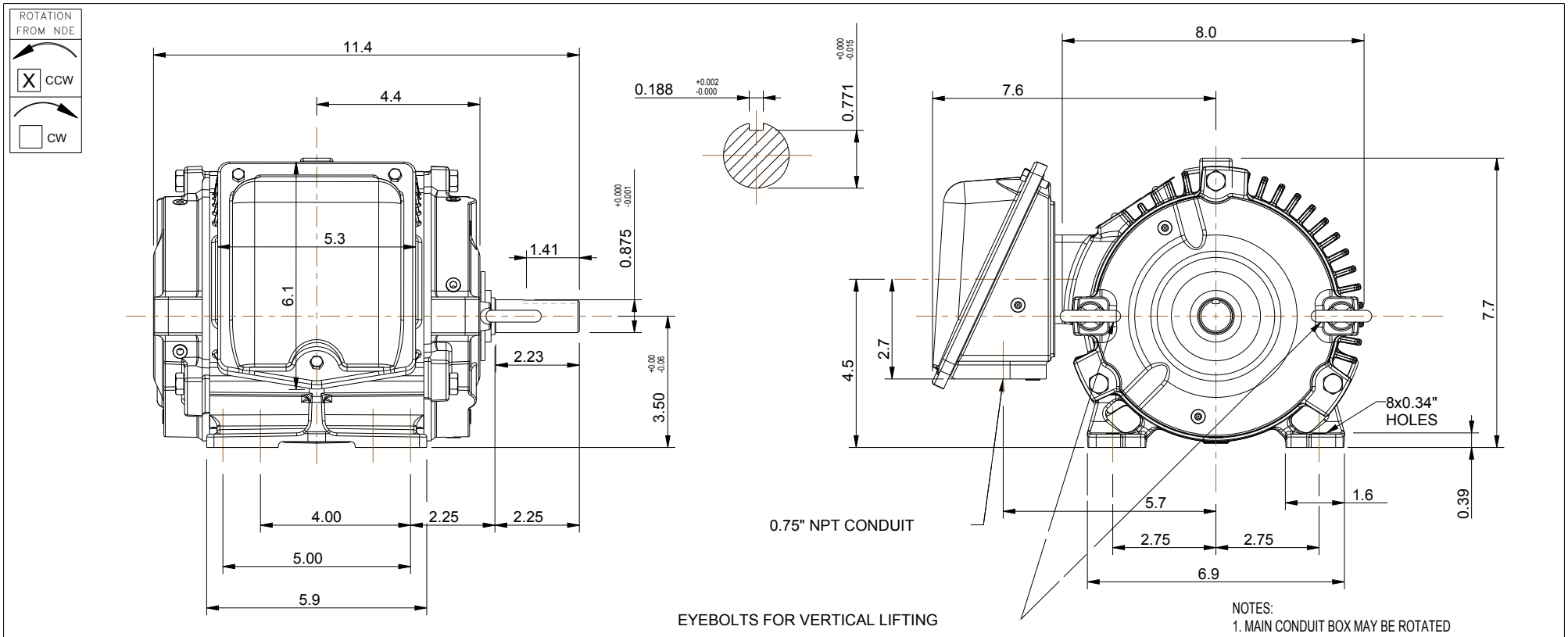

NOTES:
1. MAIN CONDUIT BOX MAY BE ROTATED IN 90 INCREMENTS
2. STANDARD PRODUCT USE BI-DIRECTIONAL FAN. OPPOSITE ROTATION AVAILABLE ONLY BY CONNECTION CHANGE.
3. KEY DIMENSIONS EQUAL (MOTOR SUPPLIED WITH KEY) 0.188" x 0.188" x 1.38"

UNITS: INCHES

BEARINGS		APPROX. WEIGHT
LS	OS	
6305ZZC3	6305ZZC3	56 lbs

CUSTOMER: _____ MOTOR MODEL NO.: _____

P.O. NO.: _____ HP: _____ VOLTAGE: _____ RPM(SYN.): _____ HZ: _____

FRAME SIZE: 140T PRODUCT TYPE: COOLING TOWER

COMMENTS: _____

PER: J. HOCK DATE: 01/24/17

TAG NUMBERS

- [x] STANDARD (NO AUX. BOXES)
- [ ] RTD AUX. BOX
- [ ] SPACE HEATER AUX. BOX
- [ ] BEARING RTD's

TOSHIBA RESERVES THE RIGHT TO MAKE CHANGES OF TECHNICAL IMPROVEMENT AND THE DATA MAY CHANGE WITHOUT NOTICE

DO NOT USE FOR CONSTRUCTION, INSTALLATION, OR APPLICATION PURPOSES UNLESS THE DRAWING IS MARKED AS CERTIFIED

- [x] PRELIMINARY
- [ ] CERTIFIED

TOSHIBA

TOSHIBA INTERNATIONAL CORPORATION

MDSLV505-01
TOTALLY ENCLOSED AIR OVER
3 PHASE INDUCTION MOTOR
F1 ASSEMBLY

SEVERE DUTY EQPGlobal CT

XT SERIES

www.toshiba.com/ind

Issued Date	6/27/2022	Transmit #	
Issued By	dschoeck	Issued Rev	

TOSHIBA
Leading Innovation >>>

TYPICAL MOTOR PERFORMANCE DATA

Model: 3/46FAGR41A-P

HP	kW	Pole	FL RPM	Frame	Voltage	Hz	Phase	FL Amps
0.75	0.55	6	1170	143T	230/460	60	3	2.6/1.3
Enclosure	**IP**	**Ins. Class**	**S.F.**	**Duty**	**NEMA Nom. Eff.**	**NEMA Design**	**kVA Code**	**Ambient (°C)**
TEAO	56	F	1.15	CONT	80.0	B		40 C

Load	HP	kW	Amperes	Efficiency (%)	Power Factor (%)
Full Load	0.75	0.6	1.3	79.3	69.7
¾ Load	0.56	0.4	1.1	77.7	60.8
½ Load	0.38	0.3	1.0	72.9	48.2
¼ Load	0.19	0.1	0.9	59.7	32.0
No Load			0.8		10.3
Locked Rotor			7.9		55.5

Torque				Rotor wk² Inertia
Full Load (lb-ft)	Locked Rotor (% FLT)	Pull Up (% FLT)	Break Down (% FLT)	(lb-ft²)
3.37	220	175	275	0.15

Safe Stall Time(s)		Sound Pressure dB(A) @ 1M	Bearings*		Approx. Motor Weight (lbs)
Cold	Hot		DE	NDE	
35	15	-	6305ZZC3	6305ZZC3	

*Bearings are the only recommended spare part(s).

Motor Options:
Mounting:Footed,Shaft:T Shaft

Customer	
Customer PO	
Sales Order	
Project #	

Tag:

All characteristics are average expected values.

TOSHIBA INTERNATIONAL CORPORATION · HOUSTON, TEXAS U.S.A.

Engineering	BMammen	Doc. Written By	D. Suarez	Doc.# / Rev	MPCF-1119 / 0
Engr. Date	11/20/2019	Doc. Approved By	M. Campbell	Doc. Issued	6/8/2011

Issued Date	6/27/2022	Transmit #	
Issued By	dschoeck	Issued Rev	

TOSHIBA
Leading Innovation >>>

TYPICAL MOTOR PERFORMANCE DATA

Model: 3/46FAGR41A-P

HP	kW	Pole	FL RPM	Frame	Voltage	Hz	Phase	FL Amps
0.75	0.55	6	950	143T	190/380	50	3	3.0/1.5
Enclosure	**IP**	**Ins. Class**	**S.F.**	**Duty**	**NEMA Nom. Eff.**	**NEMA Design**	**kVA Code**	**Ambient (°C)**
TEAO	56	F	1.0	CONT	78.5	-		40 C

Load	HP	kW	Amperes	Efficiency (%)	Power Factor (%)
Full Load	0.75	0.6	1.5	80.5	63.5
¾ Load	0.56	0.4	1.2	79.7	55.9
½ Load	0.38	0.3	1.0	76.2	44.5
¼ Load	0.19	0.1	0.9	60.9	37.5
No Load			0.8		10.8
Locked Rotor			9.2		65.5

Torque				Rotor wk² Inertia
Full Load (lb-ft)	Locked Rotor (% FLT)	Pull Up (% FLT)	Break Down (% FLT)	(lb-ft²)
4.15	175	145	225	0.15

Safe Stall Time(s)		Sound Pressure dB(A) @ 1M	Bearings*		Approx. Motor Weight (lbs)
Cold	Hot		DE	NDE	
60	47	-	6305ZZC3	6305ZZC3	

*Bearings are the only recommended spare part(s).

Motor Options:
Mounting:Footed,Shaft:T Shaft

Customer	
Customer PO	
Sales Order	
Project #	

Tag:

All characteristics are average expected values.

TOSHIBA INTERNATIONAL CORPORATION · HOUSTON, TEXAS U.S.A.

Engineering	jhock	Doc. Written By	D. Suarez	Doc.# / Rev	MPCF-1119 / 0
Engr. Date	4/1/2014	Doc. Approved By	M. Campbell	Doc. Issued	6/8/2011

Issued Date	6/27/2022	Transmit #	
Issued By	dschoeck	Issued Rev	

TOSHIBA
Leading Innovation >>>

SPEED TORQUE/CURRENT CURVE

Model: 3/46FAGR41A-P

HP	kW	Pole	FL RPM	Frame	Voltage	Hz	Phase	FL Amps
0.75	0.55	6	1170	143T	230/460	60	3	2.6/1.3
Enclosure	**IP**	**Ins. Class**	**S.F.**	**Duty**	**NEMA Nom. Eff.**	**NEMA Design**	**kVA Code**	**Ambient (°C)**
TEAO	56	F	1.15	CONT	80.0	B		40 C

Locked Rotor Amps	Rotor wk² Inertia (lb-ft²)	Torque			
		Full Load (lb-ft)	Locked Rotor (%)	Pull Up (%)	Break Down (%)
7.9	0.15	3.37	220	175	275

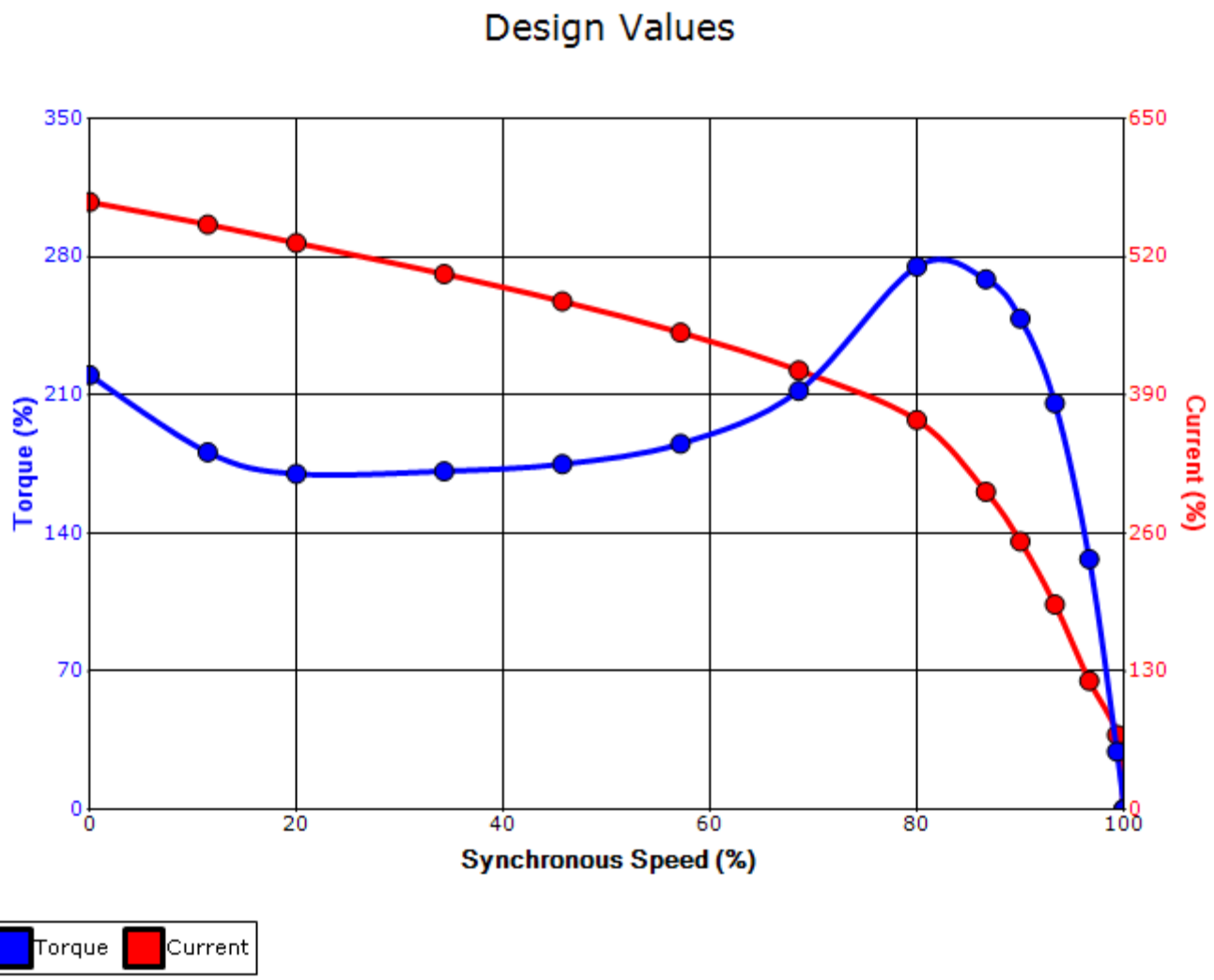

Customer			**wk² Load Inertia (lb-ft²)**	-
Customer PO			**Load Type**	-
Sales Order			**Voltage (%)**	100
Project #			**Accel. Time**	-

Tag:

All characteristics are average expected values.

TOSHIBA INTERNATIONAL CORPORATION · HOUSTON, TEXAS U.S.A.

Engineering	BMammen	**Doc. Written By**	D. Suarez	**Doc.# / Rev**	MPCF-1121 / 0
Engr. Date	11/20/2019	**Doc. Approved By**	M. Campbell	**Doc. Issued**	6/8/2011

Issued Date	6/27/2022	Transmit #	
Issued By	dschoeck	Issued Rev	

TOSHIBA
Leading Innovation >>>

SPEED TORQUE/CURRENT CURVE

Model: 3/46FAGR41A-P

HP	kW	Pole	FL RPM	Frame	Voltage	Hz	Phase	FL Amps
0.75	0.55	6	950	143T	190/380	50	3	3.0/1.5
Enclosure	**IP**	**Ins. Class**	**S.F.**	**Duty**	**NEMA Nom. Eff.**	**NEMA Design**	**kVA Code**	**Ambient (°C)**
TEAO	56	F	1.0	CONT	78.5	-		40 C

Locked Rotor Amps	Rotor wk² Inertia (lb-ft²)	Torque			
		Full Load (lb-ft)	Locked Rotor (%)	Pull Up (%)	Break Down (%)
9.2	0.15	4.15	175	145	225

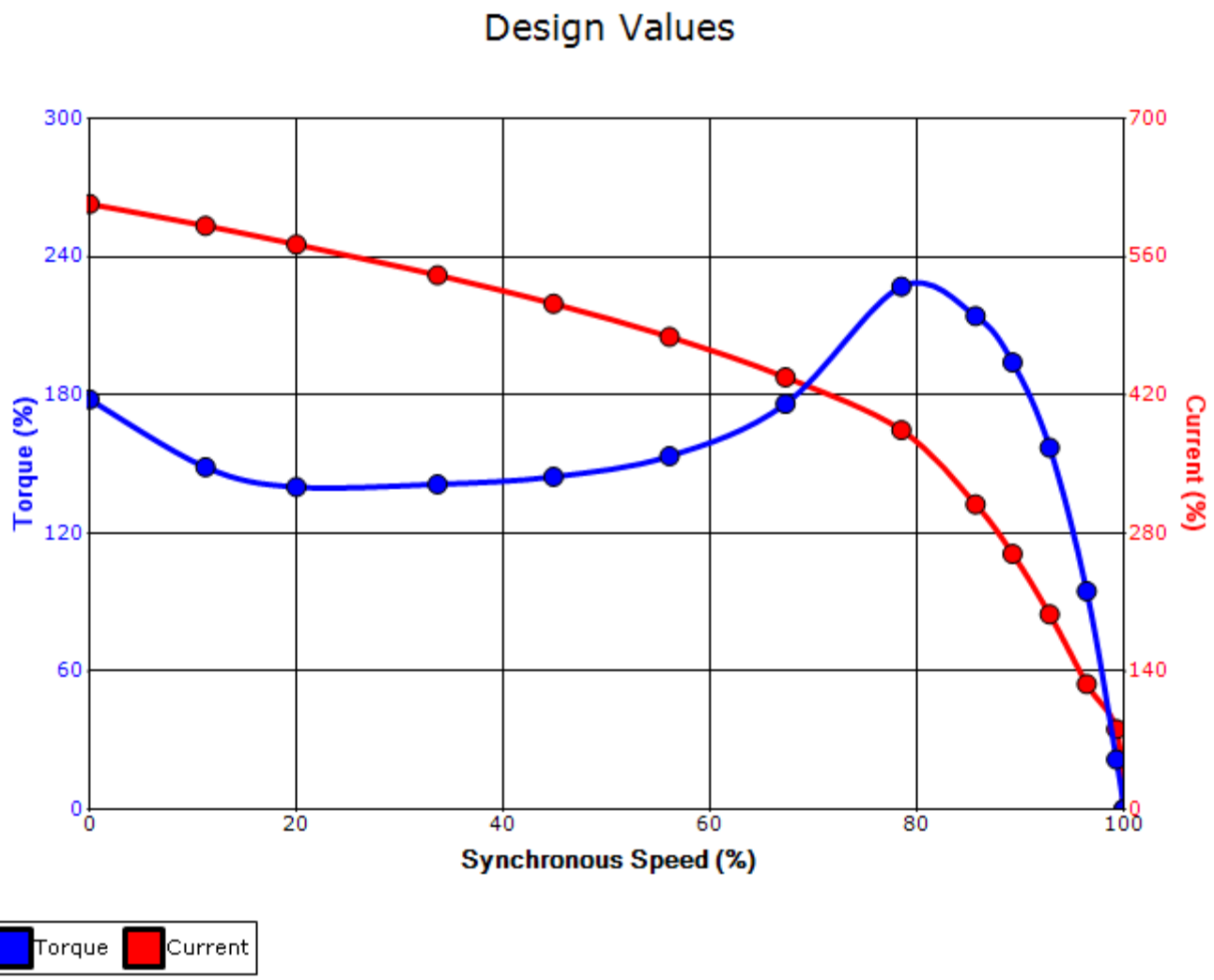

Customer			**wk² Load Inertia (lb-ft²)**	-
Customer PO			**Load Type**	-
Sales Order			**Voltage (%)**	100
Project #			**Accel. Time**	-

Tag:

All characteristics are average expected values.

TOSHIBA INTERNATIONAL CORPORATION · HOUSTON, TEXAS U.S.A.

Engineering	jhock	**Doc. Written By**	D. Suarez	**Doc.# / Rev**	MPCF-1121 / 0
Engr. Date	4/1/2014	**Doc. Approved By**	M. Campbell	**Doc. Issued**	6/8/2011

Motor Connection Diagrams
9 Leads

Across-the-Line Starting / Running Connections

Low Voltage Wye

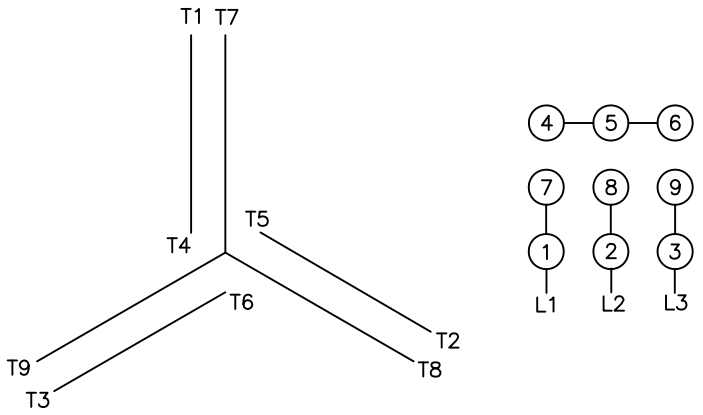

High Voltage Wye

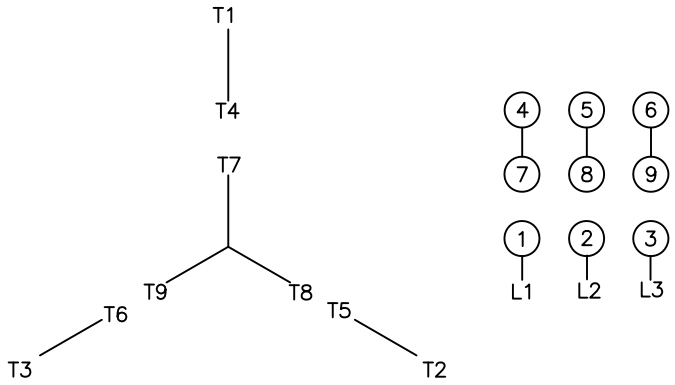

Switch L1 and L2 to reverse rotation