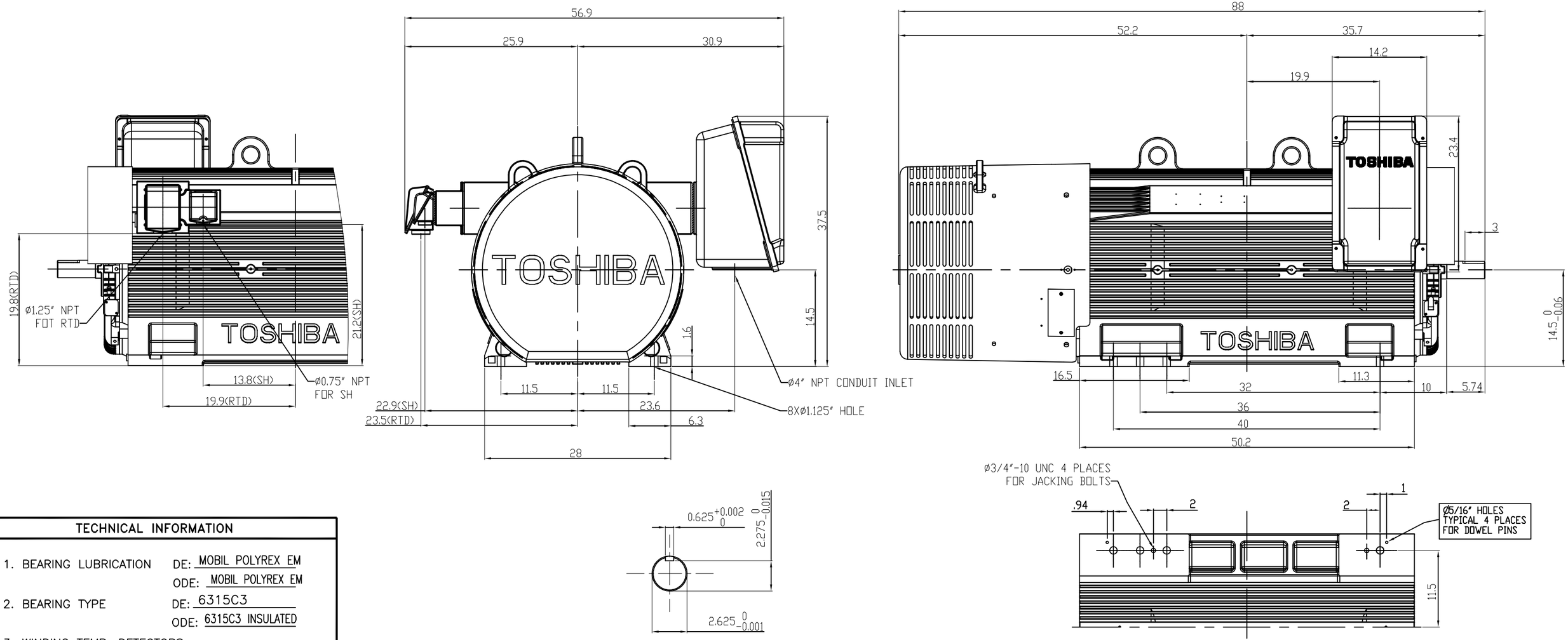

UNITS:INCHES

TECHNICAL INFORMATION

1. BEARING LUBRICATION DE: MOBIL POLYREX EM
   ODE: MOBIL POLYREX EM
2. BEARING TYPE DE: 6315C3
   ODE: 6315C3 INSULATED
3. WINDING TEMP. DETECTORS
   NUMBER AND TYPE: 6xRTD(Pt0°C–100ohm)
   LOCATION: IN STATOR SLOT
4. BEARING TEMP. DETECTORS
   NUMBER AND TYPE: N/A
5. SPACE HEATER 1 PHASE
   VOLTS: 120 WATTS: 200
6. ROTATION: CCW VIEWED FROM NON DRIVE END
   THIS MOTOR IS UNI DIRECTIONAL
7. MOTOR PAINT COLOR: GRAY
8. APPROX. WEIGHT: 7000 Lbs
9. ACCESORIES:

DRAWING LIST

MAIN TERMINAL BOX
130–7622–55

AUX TERMINAL BOX FOR	
SPACE HEATER	130–7520–50
R.T.D.	130–7522–51
THERMISTOR	N/A
PRODUCTION #	N/A

NO.	REVISION	BY	DATE
2	GRS FROM SRI, ADD DOWELS JACKING TO INLINE	RWS	1/6/14
1	ADD AIR DEFLECTOR	BEN	12/15/08
0	FIRST ISSUE	BCS	4/24/07

MOTOR OUTLINE FOR THREE PHASE INDUCTION MOTOR

CUSTOMER NAME				P.O. NO.	MOTOR TAG NO.	
OUTPUT HP	POLE	VOLTAGE V	FREQUENCY Hz	FULL LOAD SPEED (min^{-1})	TOSHIBA MODEL NO.	
TYPE	FORM	INS. CLASS F	RATING CONT.	FRAME 5811USS	S.F.	ENCLOSURE TEFC

TOSHIBA INTERNATIONAL CORPORATION
HOUSTON, TEXAS U.S.A.

3rd ANGLE PROJ.	PREPARED BY:	DATE:	CHECKED BY:	DATE:	DRAWING NO.:	REV.
	B SIDLE	4/24/07	S Johnson	4/26/07	MDSL0071–17	2