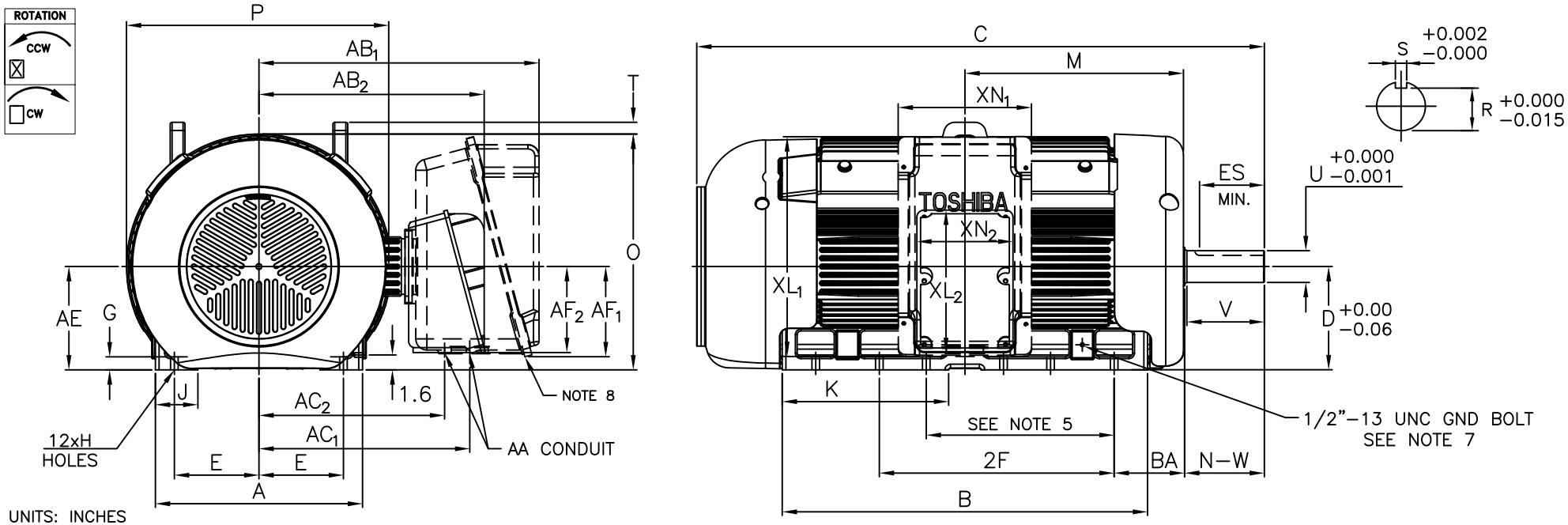

UNITS: INCHES

FRAME SIZE	MOTOR DIMENSIONS										
	A	B	C	D	G	J	K	M	O	P	T
B447TS/B449TS	22.0	38.9	56.8	11.00	1.4	4.5	17.7	23.3	25.1	27.9	1.3
B447T/B449T	22.0	38.9	60.5	11.00	1.4	4.5	17.7	23.3	25.1	27.9	1.3

FRAME SIZE	CONDUIT BOX											
	AA[NPT]	AB_1	AB_2	AC_1	AC_2	AE	AF_1	AF_2	XL_1	XL_2	XN_1	XN_2
B447/9T – B447/9TS	4.00	29.8	23.8	22.4	19.6	11.00	9.6	9.1	23.4	15.2	14.2	10.2

FRAME SIZE	MOUNTING				SHAFT EXTENSION			KEY SEAT			BEARINGS				MAXIMUM WEIGHT
	E	2F	H	BA	N–W	V	U	R	S	ES	LS ROLLER	LS BALL 6/8P	LS BALL 4P	OS 4~8P	
B447TS/B449TS	9.00	20.00/25.00	0.81	7.50	4.75	4.50	2.375	2.021	0.625	3.03	–	6318C3	6318C3	6318C3	4500 lbs.
B447T/B449T	9.00	20.00/25.00	0.81	7.50	8.50	8.25	3.375	2.880	0.875	6.91	NU322C3	6322C3	6318C3	6318C3	4500 lbs.

NOTES:
1. DIMENSION V REPRESENTS LENGTH OF STRAIGHT PART OF SHAFT.
2. MAIN CONDUIT BOX MAY BE ROTATED IN 90° INCREMENTS.
3. "TS" KEY DIMENSIONS EQUAL S x S x 3.00
   "T" KEY DIMENSIONS EQUAL S x S x 6.88
   (MOTOR SUPPLIED WITH KEY)
4. MOTOR WEIGHT SHOWN IS MAXIMUM HORSEPOWER IN FRAME.
5. THIS DIMENSION EQUALS 2F FOR B447T MOUNTING.
6. STANDARD PRODUCT USE BI–DIRECTIONAL FAN. OPPOSITE ROTATION AVAILABLE ONLY BY CONNECTION CHANGE.
7. FRAME GROUND BOLT STANDARD ON 841 PRODUCT.
8. ONLY FOR 400HP/4 POLE/460V & 350HP/6 POLE/460V MOTORS.

CUSTOMER: _____ MOTOR MODEL NO.: _____

P.O. NO.: _____ HP: _____ VOLTAGE: _____ RPM(SYN.): _____ Hz: _____

FRAME SIZE: _____ PRODUCT TYPE: TEFC EQP III SD & 841

COMMENTS: _____

PER: _____ DATE: _____

TAG NO's.:

- [x] STANDARD (NO AUX. BOXES)
- [ ] RTD AUX. BOX
- [ ] SPACE HEATER AUX. BOX
- [ ] BEARING RTD's

TOSHIBA RESERVES THE RIGHT TO MAKE CHANGES OF TECHNICAL IMPROVEMENT AND THE DATA MAY CHANGE WITHOUT NOTICE [x] PRELIMINARY

DO NOT USE FOR CONSTRUCTION, INSTALLATION, OR APPLICATION PURPOSES UNLESS THE DRAWING IS MARKED AS CERTIFIED [ ] CERTIFIED

TOSHIBA

TOSHIBA INTERNATIONAL CORPORATION

TOTALLY–ENCLOSED FAN–COOLED
HORIZONTAL FOOT–MOUNTED
3 PHASE INDUCTION MOTOR
F1 ASSEMBLY

XT SERIES

VISIT OUR WEBSITE AT:
www.toshiba.com/ind

Issued Date	6/27/2022	Transmit #	
Issued By	dschoeck	Issued Rev	

TOSHIBA
Leading Innovation >>>

TYPICAL MOTOR PERFORMANCE DATA

Model: 4004XDSB41A-R

HP	kW	Pole	FL RPM	Frame	Voltage	Hz	Phase	FL Amps
400	298	4	1785	B449T	460	60	3	471
Enclosure	**IP**	**Ins. Class**	**S.F.**	**Duty**	**NEMA Nom. Eff.**	**NEMA Design**	**kVA Code**	**Ambient (°C)**
TEFC	56	F	1.15	CONT	96.2	B		40 C

Load	HP	kW	Amperes	Efficiency (%)	Power Factor (%)
Full Load	400.00	298.3	470	96.0	82.9
¾ Load	300.00	223.7	364	95.3	80.9
½ Load	200.00	149.1	266	93.9	74.8
¼ Load	100.00	74.6	186	89.3	56.4
No Load			165.5		3.8
Locked Rotor			2900		28.3

Torque				Rotor wk² Inertia
Full Load (lb-ft)	Locked Rotor (% FLT)	Pull Up (% FLT)	Break Down (% FLT)	(lb-ft²)
1177	200	165	235	175.69

Safe Stall Time(s)		Sound Pressure dB(A) @ 1M	Bearings*		Approx. Motor Weight (lbs)
Cold	Hot		DE	NDE	
24	5	87	NU322C3	6318C3	

*Bearings are the only recommended spare part(s).

Motor Options:
Product Family:EQP Global 841
Mounting:Footed,Shaft:T Shaft

Customer	
Customer PO	
Sales Order	
Project #	

Tag:

All characteristics are average expected values.

TOSHIBA INTERNATIONAL CORPORATION · HOUSTON, TEXAS U.S.A.

Engineering	zxie	Doc. Written By	D. Suarez	Doc.# / Rev	MPCF-1119 / 0
Engr. Date	7/28/2020	Doc. Approved By	M. Campbell	Doc. Issued	6/8/2011

Issued Date	6/27/2022	Transmit #	
Issued By	dschoeck	Issued Rev	

TOSHIBA
Leading Innovation >>>

SPEED TORQUE/CURRENT CURVE

Model: 4004XDSB41A-R

HP	kW	Pole	FL RPM	Frame	Voltage	Hz	Phase	FL Amps
400	298	4	1785	B449T	460	60	3	471
Enclosure	**IP**	**Ins. Class**	**S.F.**	**Duty**	**NEMA Nom. Eff.**	**NEMA Design**	**kVA Code**	**Ambient (°C)**
TEFC	56	F	1.15	CONT	96.2	B		40 C

Locked Rotor Amps	Rotor wk² Inertia (lb-ft²)	Torque			
		Full Load (lb-ft)	Locked Rotor (%)	Pull Up (%)	Break Down (%)
2900	175.69	1177	200	165	235

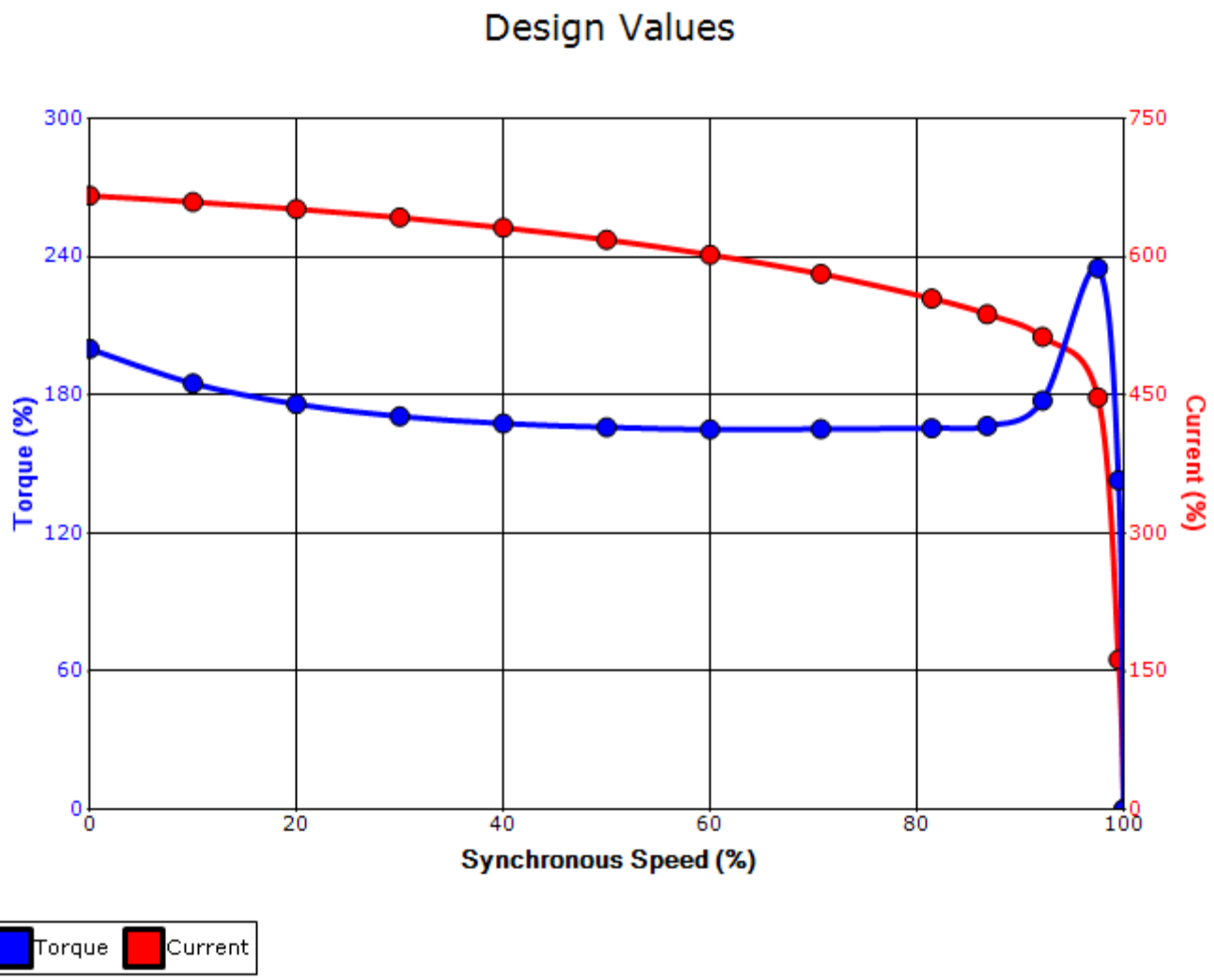

Customer			**wk² Load Inertia (lb-ft²)**	-
Customer PO			**Load Type**	-
Sales Order			**Voltage (%)**	100
Project #			**Accel. Time**	-

Tag:

All characteristics are average expected values.

TOSHIBA INTERNATIONAL CORPORATION · HOUSTON, TEXAS U.S.A.

Engineering	zxie	**Doc. Written By**	D. Suarez	**Doc.# / Rev**	MPCF-1121 / 0
Engr. Date	7/28/2020	**Doc. Approved By**	M. Campbell	**Doc. Issued**	6/8/2011

Motor Connection Diagram
3 Leads - Delta Connection

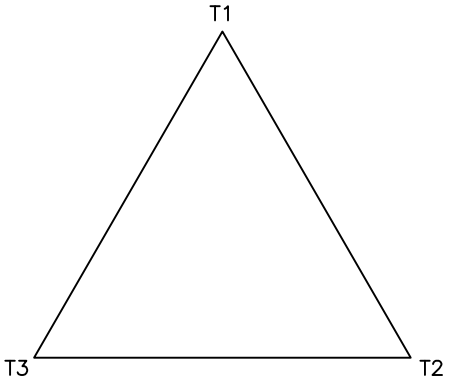

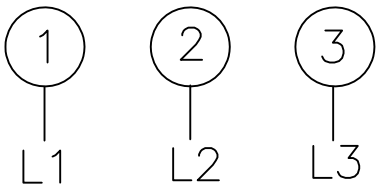

Switch L1 and L2 to reverse rotation

Each lead may consist of more than one cable.
If multiple cables represent a single lead, each one of them will be labeled with the appropriate lead number.