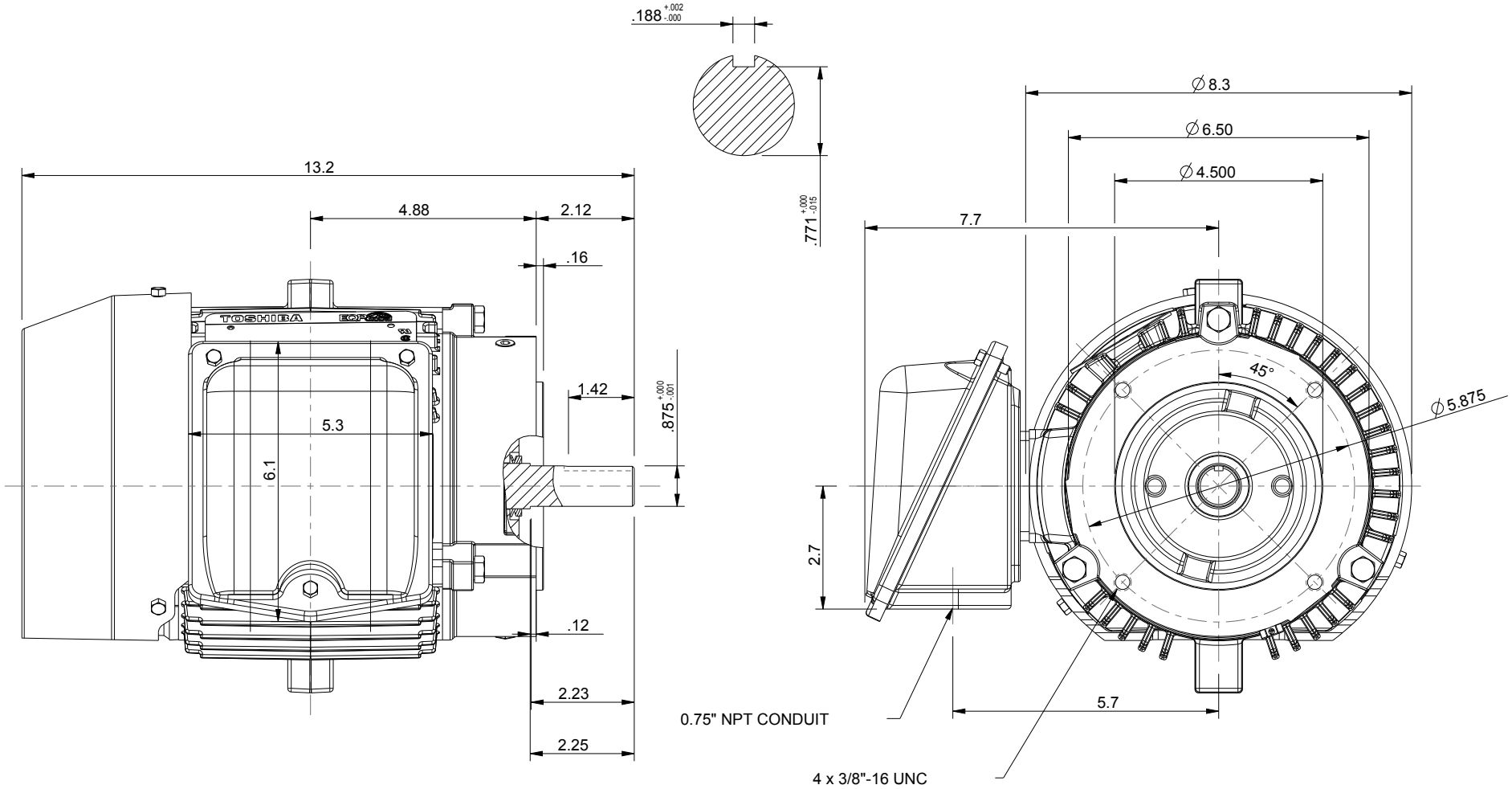

UNITS: INCHES		NOTES:
ROTATION FROM NDE		1. MAIN CONDUIT BOX MAY BE ROTATED IN 90° INCREMENTS
X CCW	CW	2. STANDARD PRODUCT USES BI-DIRECTIONAL FAN. OPPOSITE ROTATION AVAILABLE ONLY BY CONNECTION CHANGE.
		3. KEY DIMENSIONS EQUAL 0.188"x 0.188"x 1.38" (MOTOR SUPPLIED WITH KEY)

TOSHIBA RESERVES THE RIGHT TO MAKE CHANGES OF TECHNICAL IMPROVEMENT AND THE DATA MAY CHANGE WITHOUT NOTICE — [ ] PRELIMINARY

DO NOT USE FOR CONSTRUCTION, INSTALLATION, OR APPLICATION PURPOSES UNLESS THE DRAWING IS MARKED AS CERTIFIED — [X] CERTIFIED

TOSHIBA MILL & CHEMICAL DUTY EQPGlobal 840

www.toshiba.com/tic

TOSHIBA INTERNATIONAL CORPORATION

TOTALLY ENCLOSED FAN COOLED
ROUND BODY C-FACED
3 PHASE INDUCTION MOTOR
143TC-145TC F1 ASSEMBLY

DRAWING #: MDSLV245-01
REV. DATE: 06/20/18 REV. #: 3 PER.: M. O'DOWD
REV. DESCRIP.:

Issued Date	8/27/2025	Transmit #	
Issued By	dschoeck	Issued Rev	

TOSHIBA
Leading Innovation >>>

TYPICAL MOTOR PERFORMANCE DATA

Model: 0014XSSC44A-P

HP	kW	Pole	FL RPM	Frame	Voltage	Hz	Phase	FL Amps
1.01	0.75	4	1765	143T	575	60	3	1.3
Enclosure	**IP**	**Ins. Class**	**S.F.**	**Duty**	**NEMA Nom. Eff.**	**NEMA Design**	**kVA Code**	**Ambient (°C)**
TEFC	55	F	1.15	CONT	82.5	B		40 C

Load	HP	kW	Amperes	Efficiency (%)	Power Factor (%)
Full Load	1.01	0.7	1.3	85.3	67.9
¾ Load	0.75	0.6	1.1	83.3	60.2
½ Load	0.50	0.4	0.8	80.4	55.1
¼ Load	0.25	0.2	0.8	66.4	35.5
No Load			0.8		8.9
Locked Rotor			10.8		58.0

Torque				Rotor wk² Inertia
Full Load (lb-ft)	Locked Rotor (% FLT)	Pull Up (% FLT)	Break Down (% FLT)	(lb-ft²)
2.99	315	235	480	0.11

Safe Stall Time(s)		Sound Pressure dB(A) @ 1M	Bearings*		Approx. Motor Weight
Cold	Hot		DE	NDE	(lbs)
35	15	-	6305ZZC3	6305ZZC3	62

*Bearings are the only recommended spare part(s).

Motor Options:
Product Family:EQP Global 840
Mounting:Footed,Shaft:T Shaft

Customer	
Customer PO	
Sales Order	
Project #	

Tag:

All characteristics are average expected values.

TOSHIBA INTERNATIONAL CORPORATION · HOUSTON, TEXAS U.S.A.

Engineering	bmammen	**Doc. Written By**	D. Suarez	**Doc.# / Rev**	MPCF-1119 / 0
Engr. Date	8/26/2025	**Doc. Approved By**	M. Campbell	**Doc. Issued**	6/8/2011

Issued Date	8/27/2025	Transmit #	
Issued By	dschoeck	Issued Rev	

TOSHIBA
Leading Innovation >>>

SPEED TORQUE/CURRENT CURVE

Model: 0014XSSC44A-P

HP	kW	Pole	FL RPM	Frame	Voltage	Hz	Phase	FL Amps
1.01	0.75	4	1765	143T	575	60	3	1.3
Enclosure	**IP**	**Ins. Class**	**S.F.**	**Duty**	**NEMA Nom. Eff.**	**NEMA Design**	**kVA Code**	**Ambient (°C)**
TEFC	55	F	1.15	CONT	82.5	B		40 C

Locked Rotor Amps	Rotor wk² Inertia (lb-ft²)	Torque			
		Full Load (lb-ft)	Locked Rotor (%)	Pull Up (%)	Break Down (%)
10.8	0.11	2.99	315	235	480

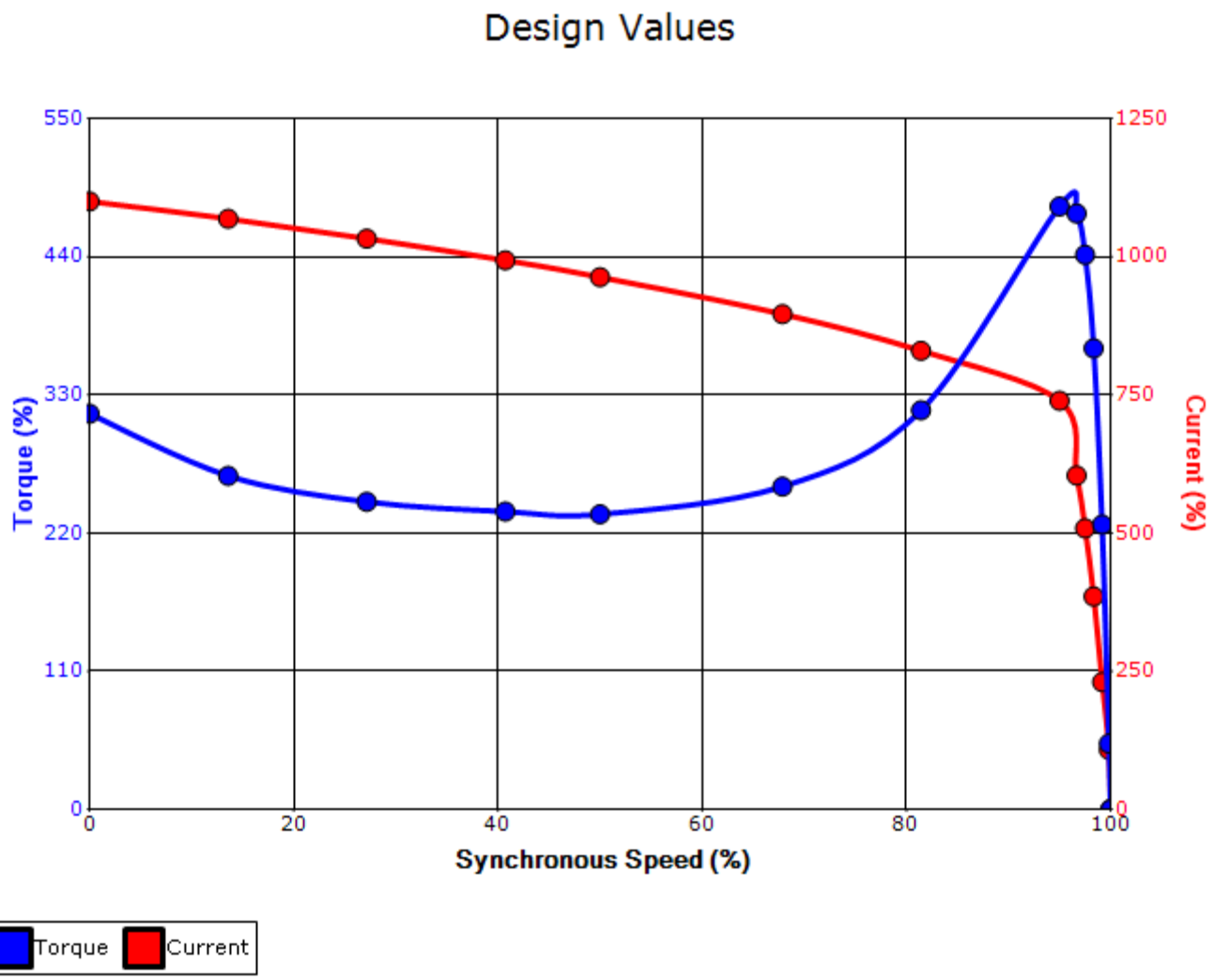

Customer			**wk² Load Inertia (lb-ft²)**	-
Customer PO			**Load Type**	-
Sales Order			**Voltage (%)**	100
Project #			**Accel. Time**	-

Tag:

All characteristics are average expected values.

TOSHIBA INTERNATIONAL CORPORATION · HOUSTON, TEXAS U.S.A.

Engineering	bmammen	**Doc. Written By**	D. Suarez	**Doc.# / Rev**	MPCF-1121 / 0
Engr. Date	8/26/2025	**Doc. Approved By**	M. Campbell	**Doc. Issued**	6/8/2011

TOSHIBA
TOSHIBA INTERNATIONAL CORPORATION

3SY

Motor Connection Diagram
3 Leads - Wye Connection
Single Voltage

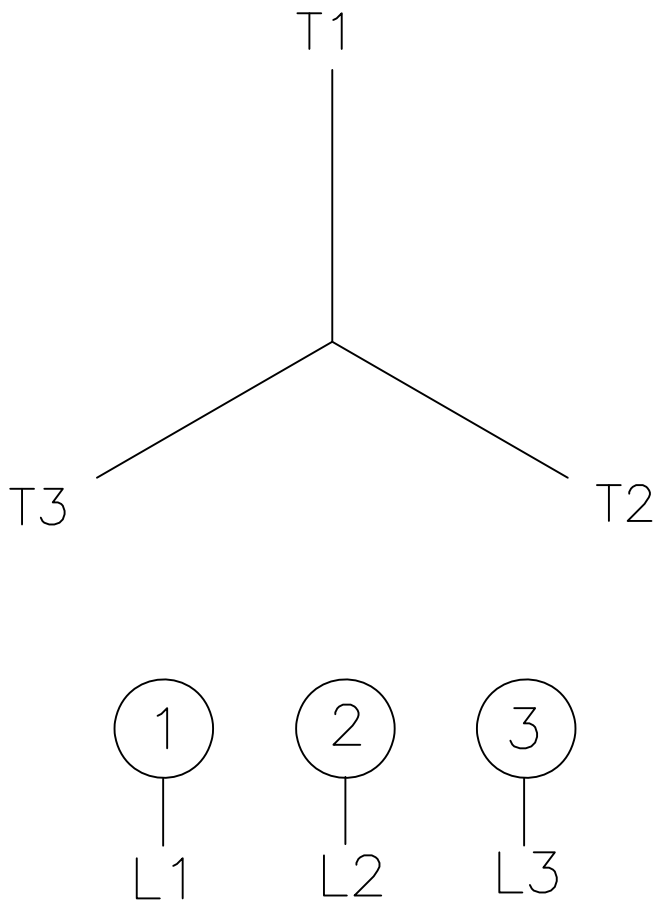

Switch L1 and L2 to reverse rotation

Each lead may consist of more than one cable.
If multiple cables represent a single lead, each one of them will be labeled with the appropriate lead number.

By: R. Murillo	Date: 4/9/08	Checked:	Date:	Revision 0