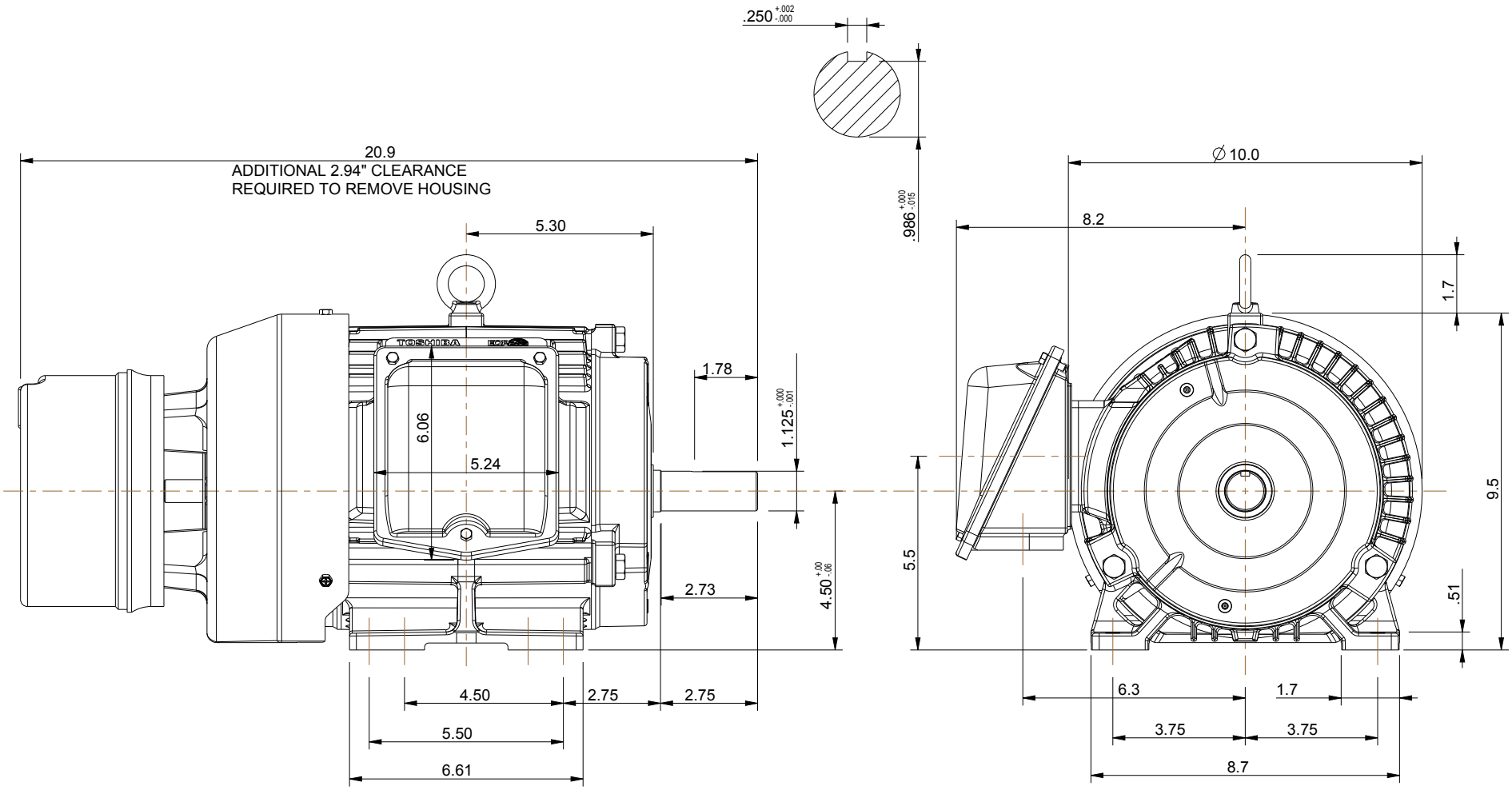

NOTES:
1. MAIN CONDUIT BOX MAY BE ROTATED IN 90° INCREMENTS
2. STANDARD PRODUCT USE BI-DIRECTIONAL FAN. OPPOSITE ROTATION AVAILABLE ONLY BY CONNECTION CHANGE.
3. KEY DIMENSIONS EQUAL 0.250" x 0.250" x 1.75" (MOTOR SUPPLIED WITH KEY)

UNITS: INCHES

TOSHIBA RESERVES THE RIGHT TO MAKE CHANGES OF TECHNICAL IMPROVEMENT WITHOUT NOTICE. DO NOT USE FOR CONSTRUCTION, INSTALLATION, OR APPLICATION PURPOSES UNLESS THE DRAWING IS CERTIFIED.

180T-BRAKE TEFC FRAME F1 ASSEMBLY

MDSLV131-02

TOSHIBA
TOSHIBA INTERNATIONAL CORPORATION

TOLERANCES	
.X	.1
.XX	.03
.XXX	.005
.XXXX	.0005

MAXIMUM MOTOR WEIGHT
97 lbs.
44 kgs.

NO	REVISION	DRAWN BY	DATE	CHECK
0	FIRST ISSUE	M.EASTERBROOK	6/4/2013	

EQP Global SD
XT SERIES

DRAWN BY: M. EASTERBROOK
CHECK BY:
APPROVED BY:

www.toshiba.com/ind

Issued Date	11/20/2024	Transmit #	
Issued By	dschoeck	Issued Rev	

TOSHIBA
Leading Innovation >>>

TYPICAL MOTOR PERFORMANCE DATA

Model: 0034SDBA41A-P

HP	kW	Pole	FL RPM	Frame	Voltage	Hz	Phase	FL Amps
3	2.2	4	1760	182T	230/460	60	3	7.8/3.9
Enclosure	**IP**	**Ins. Class**	**S.F.**	**Duty**	**NEMA Nom. Eff.**	**NEMA Design**	**kVA Code**	**Ambient (°C)**
TEFC	55	F	1.15	CONT	89.5	B		40 C

Load	HP	kW	Amperes	Efficiency (%)	Power Factor (%)
Full Load	3.00	2.2	3.9	90.1	80.4
¾ Load	2.25	1.7	3.0	89.4	76.2
½ Load	1.50	1.1	2.4	86.8	67.5
¼ Load	0.75	0.6	1.6	78.5	52.9
No Load			1.7		6.6
Locked Rotor			32		47.6

Torque				Rotor wk² Inertia
Full Load (lb-ft)	Locked Rotor (% FLT)	Pull Up (% FLT)	Break Down (% FLT)	(lb-ft²)
8.96	280	215	355	0.43

Safe Stall Time(s)		Sound Pressure dB(A) @ 1M	Bearings*		Approx. Motor Weight (lbs)
Cold	Hot		DE	NDE	
35	15	-	6306ZZC3	6306ZZC3	

*Bearings are the only recommended spare part(s).

Motor Options:
Product Family:EQP Global Brake
Mounting:Footed,Shaft:T Shaft
Brake Torque (lb-ft): 15.00

Customer	
Customer PO	
Sales Order	
Project #	

Tag:

All characteristics are average expected values.

TOSHIBA INTERNATIONAL CORPORATION · HOUSTON, TEXAS U.S.A.

Engineering	bmammen	**Doc. Written By**	D. Suarez	**Doc.# / Rev**	MPCF-1119 / 0
Engr. Date	9/6/2024	**Doc. Approved By**	M. Campbell	**Doc. Issued**	6/8/2011

Issued Date	11/20/2024	Transmit #	
Issued By	dschoeck	Issued Rev	

TOSHIBA
Leading Innovation >>>

SPEED TORQUE/CURRENT CURVE

Model: 0034SDBA41A-P

HP	kW	Pole	FL RPM	Frame	Voltage	Hz	Phase	FL Amps
3	2.2	4	1760	182T	230/460	60	3	7.8/3.9
Enclosure	**IP**	**Ins. Class**	**S.F.**	**Duty**	**NEMA Nom. Eff.**	**NEMA Design**	**kVA Code**	**Ambient (°C)**
TEFC	55	F	1.15	CONT	89.5	B		40 C

Locked Rotor Amps	Rotor wk² Inertia (lb-ft²)	Torque			
		Full Load (lb-ft)	Locked Rotor (%)	Pull Up (%)	Break Down (%)
32	0.43	8.96	280	215	355

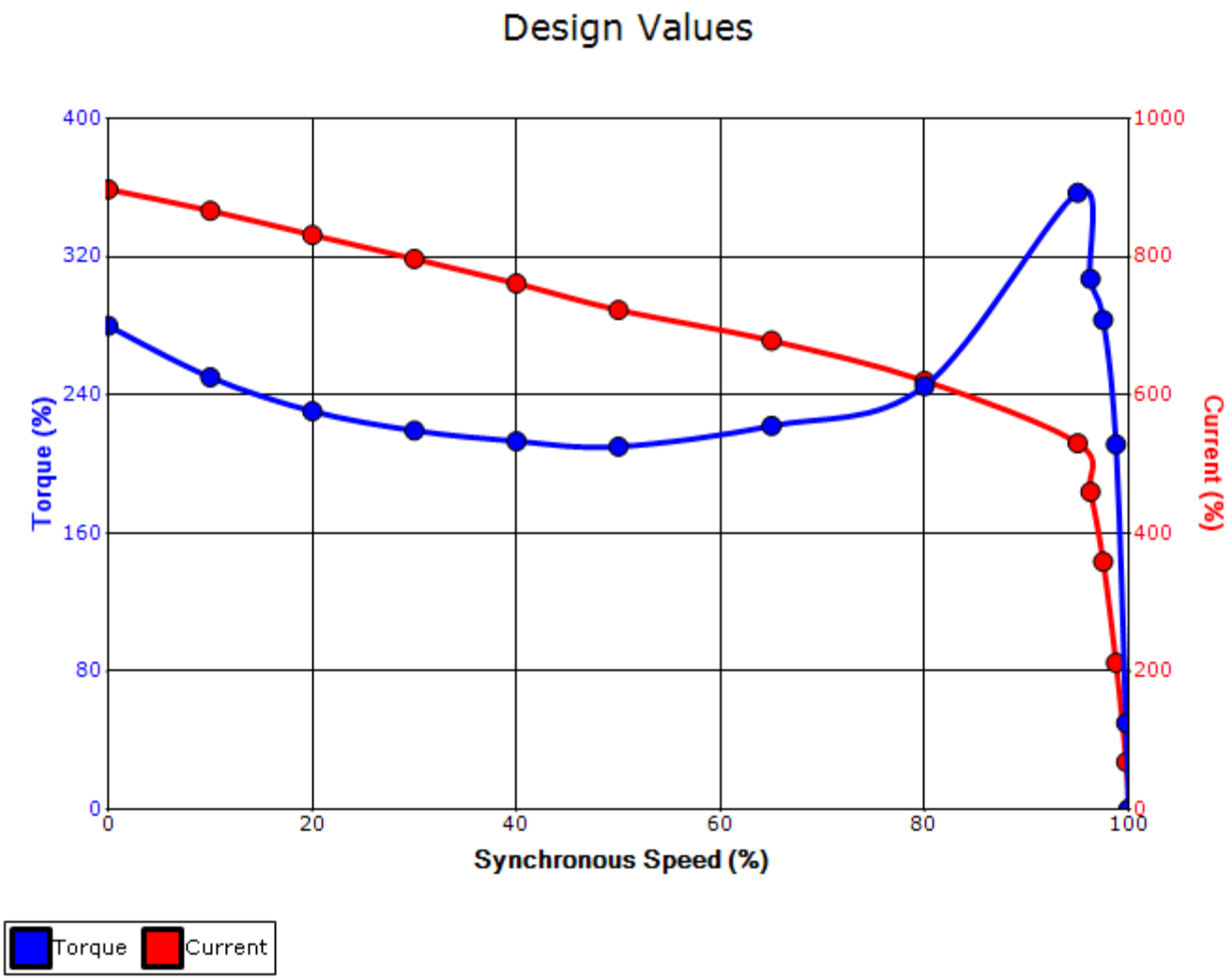

Customer			**wk² Load Inertia (lb-ft²)**	-
Customer PO			**Load Type**	-
Sales Order			**Voltage (%)**	100
Project #			**Accel. Time**	-

Tag:

All characteristics are average expected values.

TOSHIBA INTERNATIONAL CORPORATION · HOUSTON, TEXAS U.S.A.

Engineering	bmammen	**Doc. Written By**	D. Suarez	**Doc.# / Rev**	MPCF-1121 / 0
Engr. Date	9/6/2024	**Doc. Approved By**	M. Campbell	**Doc. Issued**	6/8/2011

Motor Connection Diagrams
9 Leads

Across-the-Line Starting / Running Connections

Low Voltage Wye

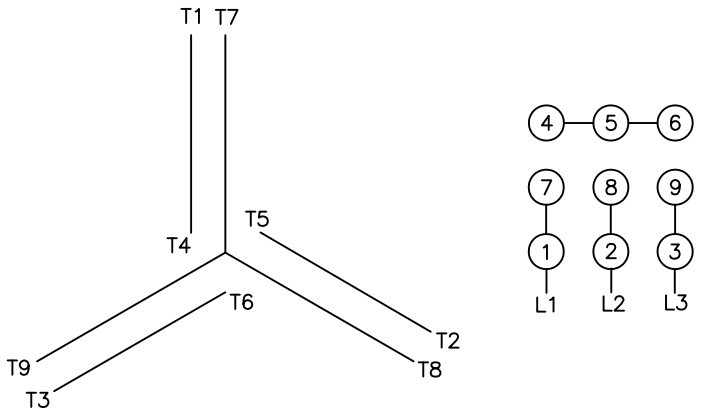

High Voltage Wye

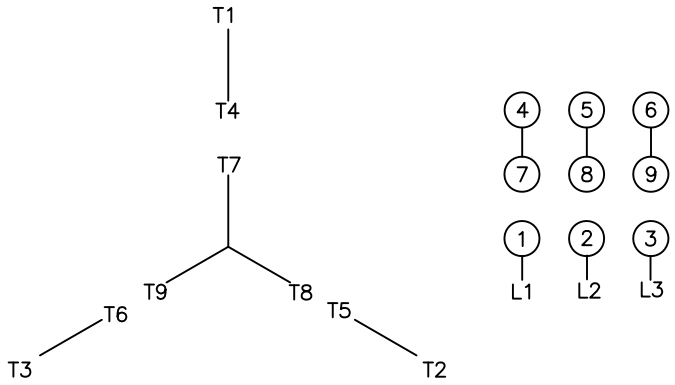

Switch L1 and L2 to reverse rotation