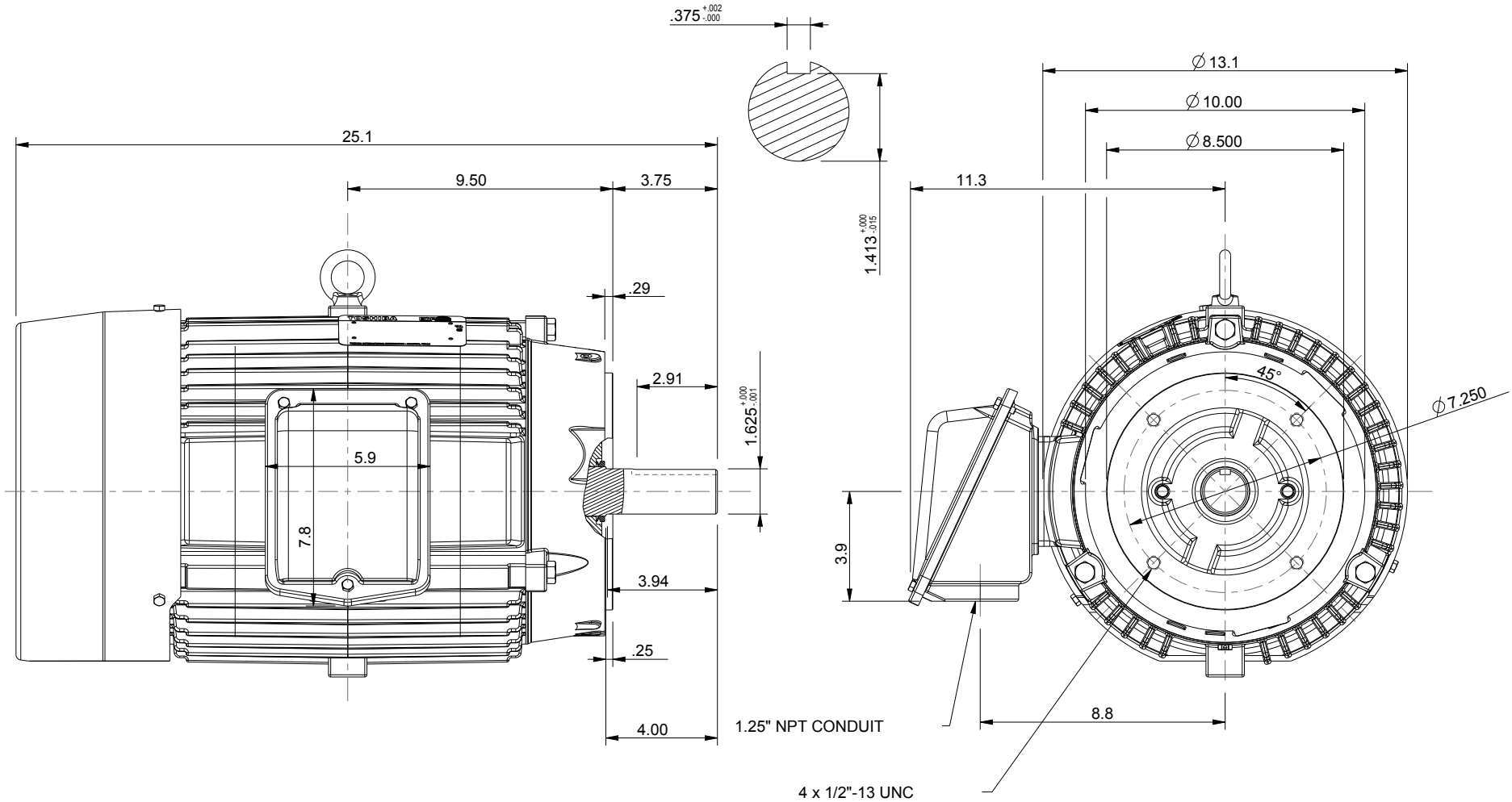

UNITS: INCHES

ROTATION FROM NDE

X CCW CW

NOTES:

1. MAIN CONDUIT BOX MAY BE ROTATED IN 90° INCREMENTS
2. STANDARD PRODUCT USES BI-DIRECTIONAL FAN. OPPOSITE ROTATION AVAILABLE ONLY BY CONNECTION CHANGE.
3. KEY DIMENSIONS EQUAL 0.375"x 0.375"x 2.88" (MOTOR SUPPLIED WITH KEY)

TOSHIBA RESERVES THE RIGHT TO MAKE CHANGES OF TECHNICAL IMPROVEMENT AND THE DATA MAY CHANGE WITHOUT NOTICE

[ ] PRELIMINARY

DO NOT USE FOR CONSTRUCTION, INSTALLATION, OR APPLICATION PURPOSES UNLESS THE DRAWING IS MARKED AS CERTIFIED

[X] CERTIFIED

TOSHIBA MILL & CHEMICAL DUTY EQPGlobal 840

www.toshiba.com/tic

TOSHIBA INTERNATIONAL CORPORATION

TOTALLY ENCLOSED FAN COOLED
ROUND BODY C-FACED
3 PHASE INDUCTION MOTOR
254TC-256TC F1 ASSEMBLY

DRAWING #: MDSLV245-04

REV. DATE: 06/30/18 REV. #: 1 PER.: M. O'DOWD

REV. DESCRIP.:

Issued Date	12/19/2024	Transmit #	
Issued By	dschoeck	Issued Rev	

TOSHIBA
Leading Innovation >>>

TYPICAL MOTOR PERFORMANCE DATA

Model: 0202XSSC44A-P

HP	kW	Pole	FL RPM	Frame	Voltage	Hz	Phase	FL Amps
20	15	2	3530	256TC	575	60	3	18.9
Enclosure	**IP**	**Ins. Class**	**S.F.**	**Duty**	**NEMA Nom. Eff.**	**NEMA Design**	**kVA Code**	**Ambient (°C)**
TEFC	55	F	1.15	CONT	91.0	B		40 C

Load	HP	kW	Amperes	Efficiency (%)	Power Factor (%)
Full Load	20.00	14.9	18.9	91.1	87.0
¾ Load	15.00	11.2	14.7	90.4	84.3
½ Load	10.00	7.5	10.9	88.2	77.3
¼ Load	5.00	3.7	7.9	81.1	57.8
No Load			5.4		8.7
Locked Rotor			126		35.8

Torque				Rotor wk² Inertia
Full Load (lb-ft)	Locked Rotor (% FLT)	Pull Up (% FLT)	Break Down (% FLT)	(lb-ft²)
29.8	225	175	290	1.38

Safe Stall Time(s)		Sound Pressure dB(A) @ 1M	Bearings*		Approx. Motor Weight
Cold	Hot		DE	NDE	(lbs)
28	15	-	6309ZZC3	6309ZZC3	300

*Bearings are the only recommended spare part(s).

Motor Options:
Product Family:EQP Global 840
Mounting:C-Face Round,Shaft:T Shaft

Customer	
Customer PO	
Sales Order	
Project #	

Tag:

All characteristics are average expected values.

TOSHIBA INTERNATIONAL CORPORATION · HOUSTON, TEXAS U.S.A.

Engineering	aguerrettaz	**Doc. Written By**	D. Suarez	**Doc.# / Rev**	MPCF-1119 / 0
Engr. Date	8/2/2024	**Doc. Approved By**	M. Campbell	**Doc. Issued**	6/8/2011

Issued Date	12/19/2024	Transmit #	
Issued By	dschoeck	Issued Rev	

TOSHIBA
Leading Innovation >>>

SPEED TORQUE/CURRENT CURVE

Model: 0202XSSC44A-P

HP	kW	Pole	FL RPM	Frame	Voltage	Hz	Phase	FL Amps
20	15	2	3530	256TC	575	60	3	18.9
Enclosure	**IP**	**Ins. Class**	**S.F.**	**Duty**	**NEMA Nom. Eff.**	**NEMA Design**	**kVA Code**	**Ambient (°C)**
TEFC	55	F	1.15	CONT	91.0	B		40 C

Locked Rotor Amps	Rotor wk² Inertia (lb-ft²)	Torque			
		Full Load (lb-ft)	Locked Rotor (%)	Pull Up (%)	Break Down (%)
126	1.38	29.8	225	175	290

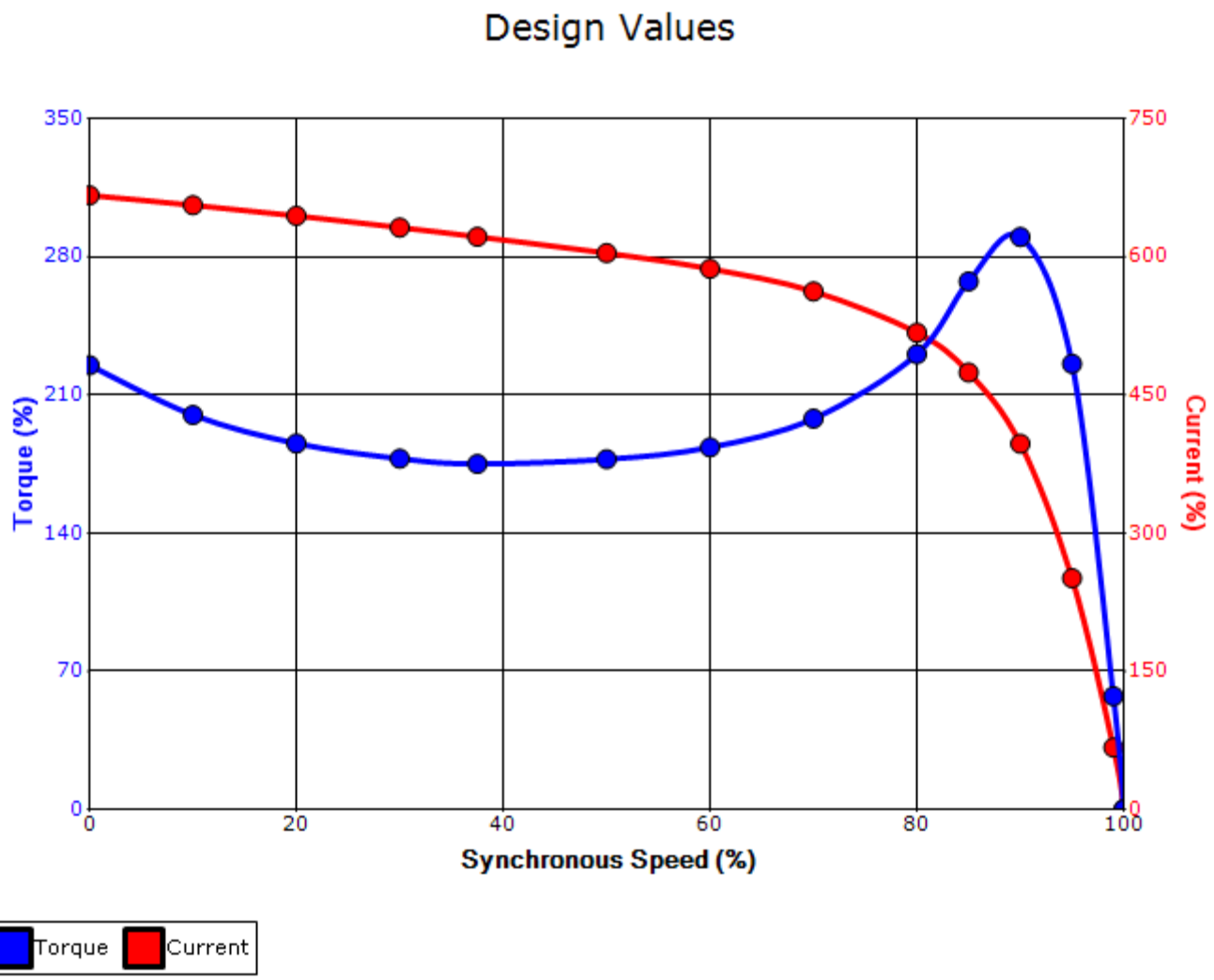

Customer			**wk² Load Inertia (lb-ft²)**	-
Customer PO			**Load Type**	-
Sales Order			**Voltage (%)**	100
Project #			**Accel. Time**	-

Tag:

All characteristics are average expected values.

TOSHIBA INTERNATIONAL CORPORATION · HOUSTON, TEXAS U.S.A.

Engineering	aguerrettaz	**Doc. Written By**	D. Suarez	**Doc.# / Rev**	MPCF-1121 / 0
Engr. Date	8/2/2024	**Doc. Approved By**	M. Campbell	**Doc. Issued**	6/8/2011

Motor Connection Diagram
3 Leads - Delta Connection

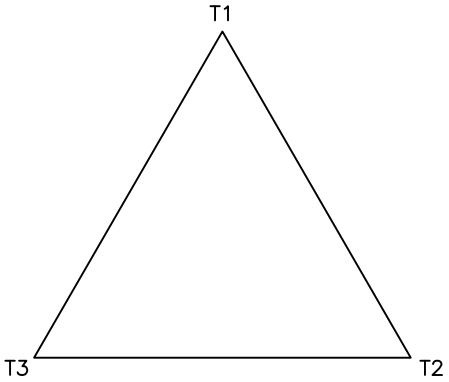

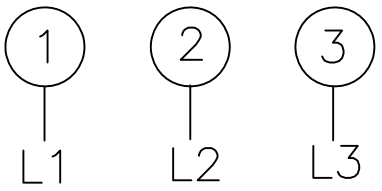

Switch L1 and L2 to reverse rotation

Each lead may consist of more than one cable.
If multiple cables represent a single lead, each one of them will be labeled with the appropriate lead number.