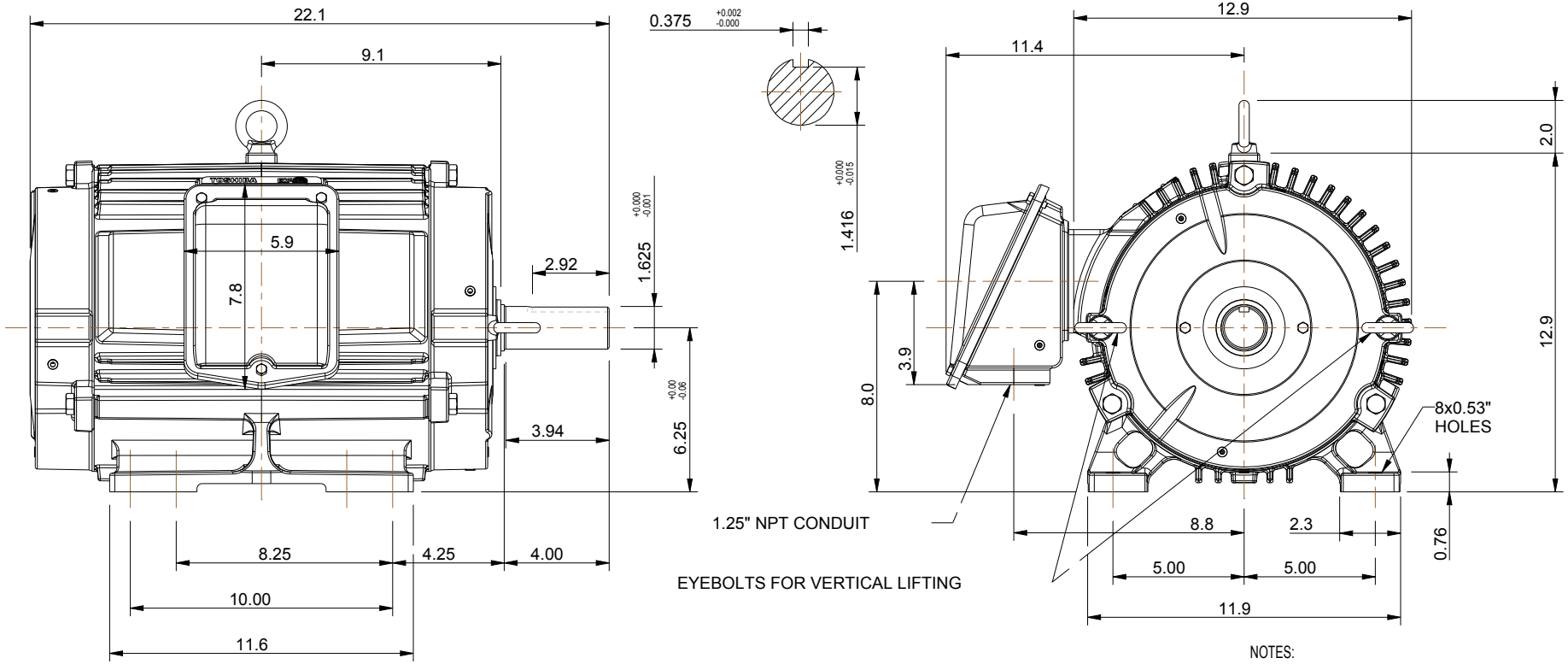

UNITS: INCHES

BEARINGS		APPROX. WEIGHT
LS	OS	
6309ZZC3	6309ZZC3	292 lbs

NOTES:
1. MAIN CONDUIT BOX MAY BE ROTATED IN 90 INCREMENTS
2. STANDARD PRODUCT USE BI-DIRECTIONAL FAN. OPPOSITE ROTATION AVAILABLE ONLY BY CONNECTION CHANGE.
3. KEY DIMENSIONS EQUAL (MOTOR SUPPLIED WITH KEY) 0.375" x 0.375" x 2.88"

CUSTOMER: _____ MOTOR MODEL NO.: _____

P.O. NO.: _____ HP: _____ VOLTAGE: _____ RPM(SYN.): _____ HZ: _____

FRAME SIZE: 250T PRODUCT TYPE: COOLING TOWER

COMMENTS: _____

PER: DATE:

TAG NUMBERS

- [X] STANDARD (NO AUX. BOXES)
- [ ] RTD AUX. BOX
- [ ] SPACE HEATER AUX. BOX
- [ ] BEARING RTD's

TOSHIBA RESERVES THE RIGHT TO MAKE CHANGES OF TECHNICAL IMPROVEMENT AND THE DATA MAY CHANGE WITHOUT NOTICE

DO NOT USE FOR CONSTRUCTION, INSTALLATION, OR APPLICATION PURPOSES UNLESS THE DRAWING IS MARKED AS CERTIFIED

- [X] PRELIMINARY
- [ ] CERTIFIED

TOSHIBA

TOSHIBA INTERNATIONAL CORPORATION

MDSLV505-04
TOTALLY ENCLOSED AIR OVER
3 PHASE INDUCTION MOTOR
F1 ASSEMBLY

SEVERE DUTY EQPGlobal CT

XT SERIES

www.toshiba.com/ind

Issued Date	12/19/2024	Transmit #	
Issued By	dschoeck	Issued Rev	

TOSHIBA
Leading Innovation >>>

TYPICAL MOTOR PERFORMANCE DATA

Model: 0204FAGC41A-P

HP	kW	Pole	FL RPM	Frame	Voltage	Hz	Phase	FL Amps
20	15	4	1770	256T	575	60	3	21
Enclosure	**IP**	**Ins. Class**	**S.F.**	**Duty**	**NEMA Nom. Eff.**	**NEMA Design**	**kVA Code**	**Ambient (°C)**
TEAO	56	F	1.15	CONT	93.0	B		40 C

Load	HP	kW	Amperes	Efficiency (%)	Power Factor (%)
Full Load	20.00	14.9	21	93.0	76.0
¾ Load	15.00	11.2	17.1	92.2	71.3
½ Load	10.00	7.5	13.5	89.9	61.3
¼ Load	5.00	3.7	9.4	83.1	47.5
No Load			9.8		4.6
Locked Rotor			126		40.0

Torque				Rotor wk² Inertia
Full Load (lb-ft)	Locked Rotor (% FLT)	Pull Up (% FLT)	Break Down (% FLT)	(lb-ft²)
59.3	275	195	300	3.17

Safe Stall Time(s)		Sound Pressure dB(A) @ 1M	Bearings*		Approx. Motor Weight (lbs)
Cold	Hot		DE	NDE	
35	15	-	6309ZZC3	6309ZZC3	

*Bearings are the only recommended spare part(s).

Motor Options:
Product Family:EQP Global Cooling Tower
Mounting:Footed,Shaft:T Shaft

Customer	
Customer PO	
Sales Order	
Project #	

Tag:

All characteristics are average expected values.

TOSHIBA INTERNATIONAL CORPORATION · HOUSTON, TEXAS U.S.A.

Engineering	Jrodrigu	Doc. Written By	D. Suarez	Doc.# / Rev	MPCF-1119 / 0
Engr. Date	7/25/2024	Doc. Approved By	M. Campbell	Doc. Issued	6/8/2011

Issued Date	12/19/2024	Transmit #	
Issued By	dschoeck	Issued Rev	

TOSHIBA
Leading Innovation >>>

SPEED TORQUE/CURRENT CURVE

Model: 0204FAGC41A-P

HP	kW	Pole	FL RPM	Frame	Voltage	Hz	Phase	FL Amps
20	15	4	1770	256T	575	60	3	21
Enclosure	**IP**	**Ins. Class**	**S.F.**	**Duty**	**NEMA Nom. Eff.**	**NEMA Design**	**kVA Code**	**Ambient (°C)**
TEAO	56	F	1.15	CONT	93.0	B		40 C

Locked Rotor Amps	Rotor wk² Inertia (lb-ft²)	Torque			
		Full Load (lb-ft)	Locked Rotor (%)	Pull Up (%)	Break Down (%)
126	3.17	59.3	275	195	300

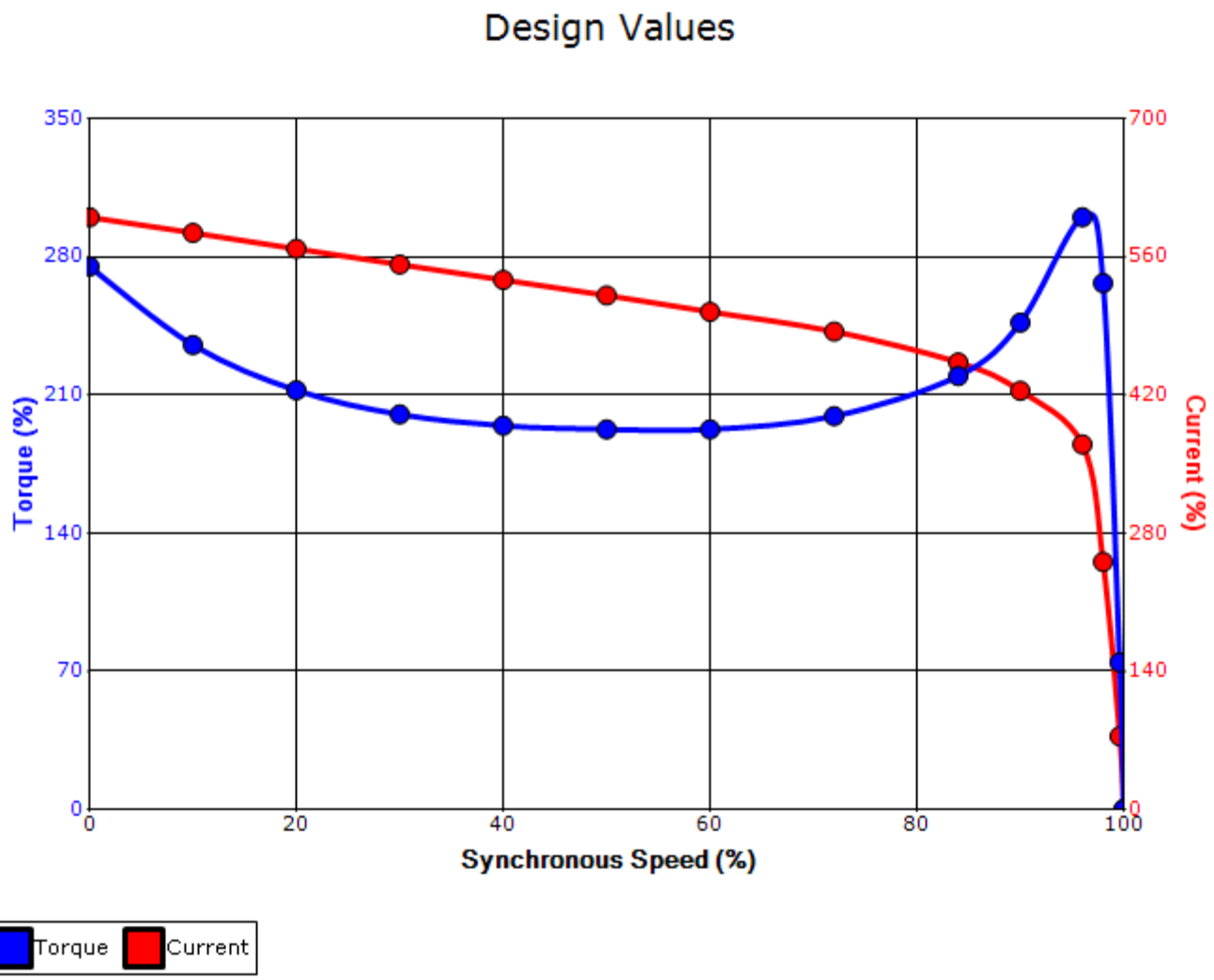

Customer			**wk² Load Inertia (lb-ft²)**	-
Customer PO			**Load Type**	-
Sales Order			**Voltage (%)**	100
Project #			**Accel. Time**	-

Tag:

All characteristics are average expected values.

TOSHIBA INTERNATIONAL CORPORATION · HOUSTON, TEXAS U.S.A.

Engineering	Jrodrigu	**Doc. Written By**	D. Suarez	**Doc.# / Rev**	MPCF-1121 / 0
Engr. Date	7/25/2024	**Doc. Approved By**	M. Campbell	**Doc. Issued**	6/8/2011

Motor Connection Diagrams
6 Leads

Across the Line Starting / Run - Delta:

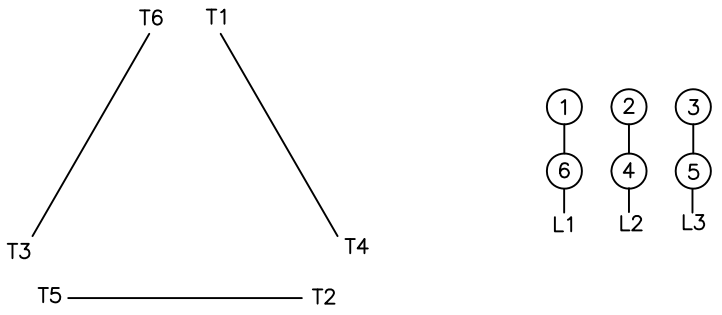

Alternate Starting Connection - Wye:

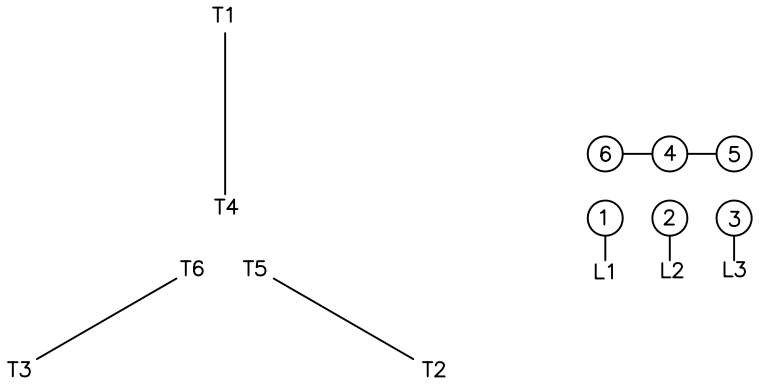

Switch L1 and L2 to reverse rotation