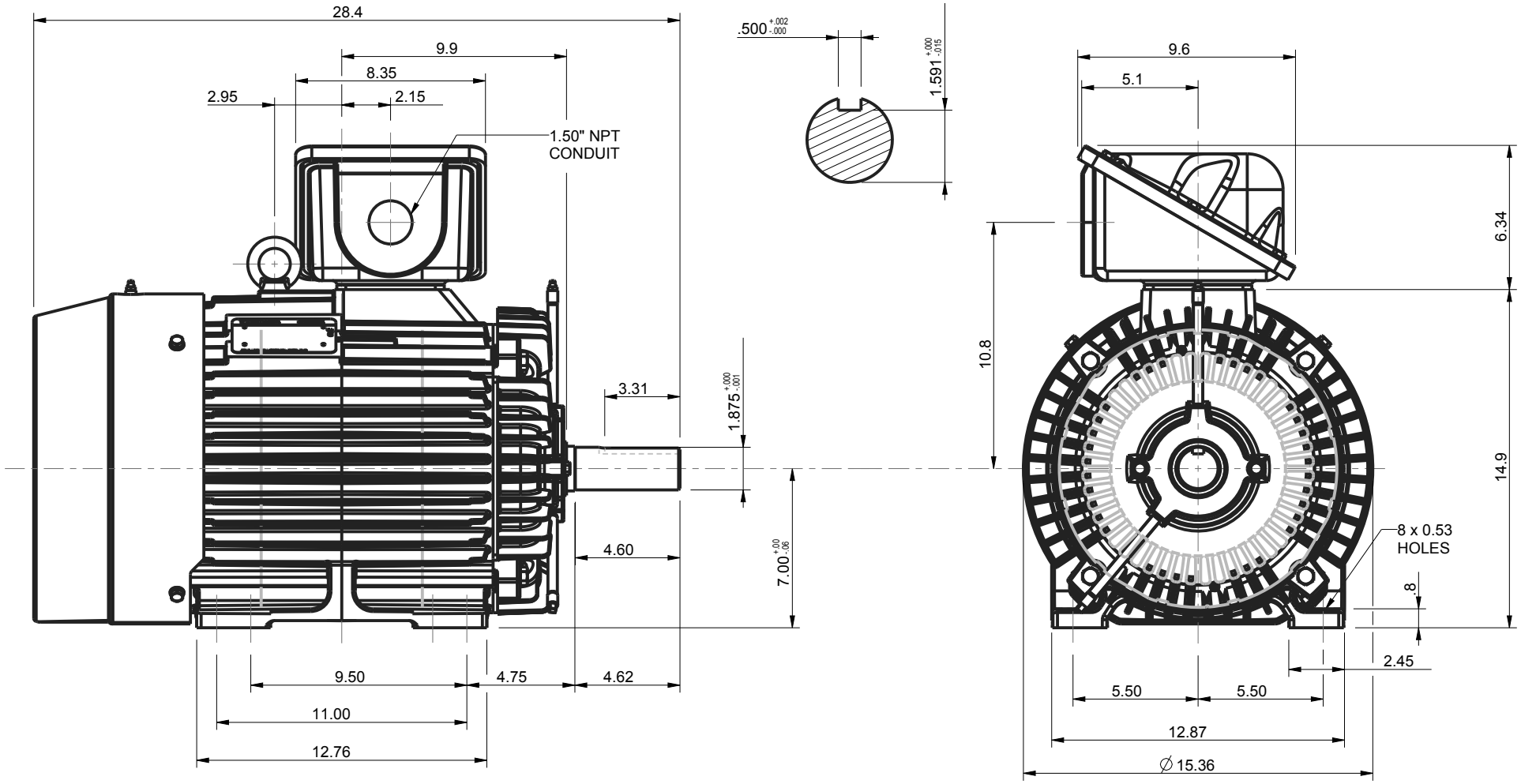

NOTES:
1. MAIN CONDUIT BOX MAY BE ROTATED IN 90° INCREMENTS
2. STANDARD PRODUCT USE BI-DIRECTIONAL FAN. OPPOSITE ROTATION AVAILABLE ONLY BY CONNECTION CHANGE.
3. KEY DIMENSIONS EQUAL 0.500" x 0.500" x 3.25" (MOTOR SUPPLIED WITH KEY)

UNITS: INCHES

TOSHIBA RESERVES THE RIGHT TO MAKE CHANGES OF TECHNICAL IMPROVEMENT WITHOUT NOTICE. DO NOT USE FOR CONSTRUCTION, INSTALLATION, OR APPLICATION PURPOSES UNLESS THE DRAWING IS CERTIFIED.

280T TEFC FRAME
F3 ASSEMBLY

MSDLV019-05

TOLERANCES

.X	.1
.XX	.03
.XXX	.005
.XXXX	.0005

MAXIMUM MOTOR WEIGHT
lbs.
kgs.

NO	REVISION	DRAWN BY	DATE	CHECK
0	FIRST ISSUE (OVERRIDE 'R' DIMENSION)	M. O'DOWD	04/01/13	JR

XT SERIES

DRAWN BY: M. O'DOWD
CHECK BY: J. RUSSELL
APPROVED BY:

TOSHIBA
TOSHIBA INTERNATIONAL CORPORATION

www.toshiba.com/ind

Issued Date	9/24/2019	Transmit #	
Issued By	dschoeck	Issued Rev	

TOSHIBA

TYPICAL MOTOR PERFORMANCE DATA

Model: 0206SDSC41A-P3

HP	kW	Pole	FL RPM	Frame	Voltage	Hz	Phase	FL Amps
20	15	6	1170	286T	575	60	3	20
Enclosure	**IP**	**Ins. Class**	**S.F.**	**Duty**	**NEMA Nom. Eff.**	**NEMA Design**	**kVA Code**	**Ambient (°C)**
TEFC	55	F	1.15	CONT	91.7	B	G	40 C

Load	HP	kW	Amperes	Efficiency (%)	Power Factor (%)
Full Load	20	14.9	20.0	91.9	80.4
¾ Load	15.00	11.2	15.6	92.0	76.7
½ Load	10.00	7.5	12.1	90.9	67.8
¼ Load	5.00	3.7	9.5	84.8	46.1
No Load			8.3		5.0
Locked Rotor			115		45.0

Torque				Rotor wk² Inertia
Full Load (lb-ft)	Locked Rotor (% FLT)	Pull Up (% FLT)	Break Down (% FLT)	(lb-ft²)
89.8	235	205	255	6.10

Safe Stall Time(s)		Sound Pressure dB(A) @ 1M	Bearings*		Approx. Motor Weight (lbs)
Cold	Hot		DE	NDE	
35	15	-	6310ZC3	6310ZC3	

*Bearings are the only recommended spare part(s).

Motor Options:
Mounting:Footed,Shaft:T Shaft

Customer	
Customer PO	
Sales Order	
Project #	

Tag:

All characteristics are average expected values.

TOSHIBA INTERNATIONAL CORPORATION · HOUSTON, TEXAS U.S.A.

Engineering	garce	**Doc. Written By**	D. Suarez	**Doc.# / Rev**	MPCF-1119 / 1
Engr. Date	8/21/2015	**Doc. Approved By**	M. Campbell	**Doc. Issued**	9/20/2019

Issued Date	9/24/2019	Transmit #	
Issued By	dschoeck	Issued Rev	

TOSHIBA

SPEED TORQUE/CURRENT CURVE

Model: 0206SDSC41A-P3

HP	kW	Pole	FL RPM	Frame	Voltage	Hz	Phase	FL Amps
20	15	6	1170	286T	575	60	3	20
Enclosure	**IP**	**Ins. Class**	**S.F.**	**Duty**	**NEMA Nom. Eff.**	**NEMA Design**	**kVA Code**	**Ambient (°C)**
TEFC	55	F	1.15	CONT	91.7	B	G	40 C

Locked Rotor Amps	Rotor wk² Inertia (lb-ft²)	Torque			
		Full Load (lb-ft)	Locked Rotor (%)	Pull Up (%)	Break Down (%)
115	6.10	89.8	235	205	255

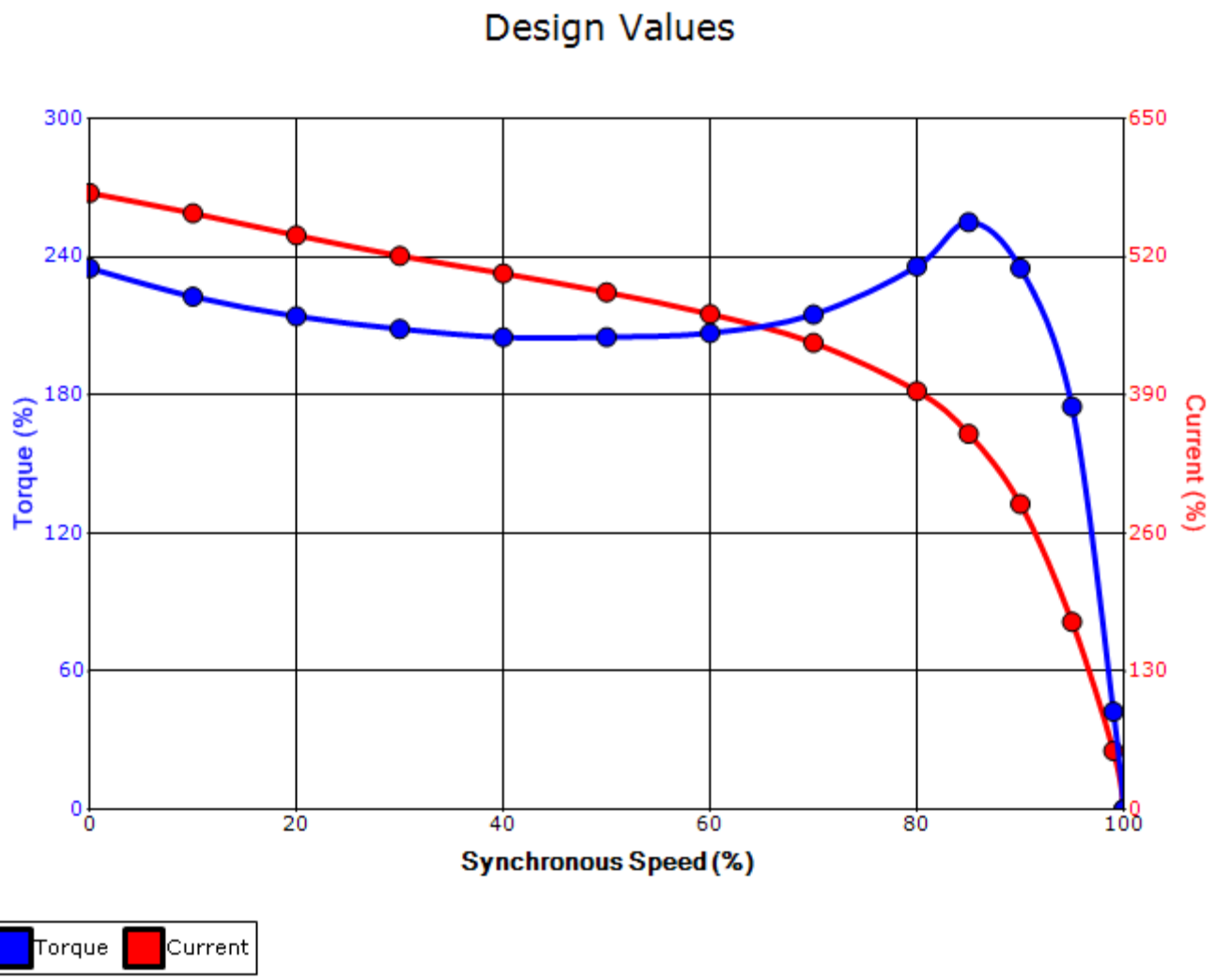

Customer			**wk² Load Inertia (lb-ft²)**	-
Customer PO			**Load Type**	-
Sales Order			**Voltage (%)**	100
Project #			**Accel. Time**	-

Tag:

All characteristics are average expected values.

TOSHIBA INTERNATIONAL CORPORATION · HOUSTON, TEXAS U.S.A.

Engineering	garce	**Doc. Written By**	D. Suarez	**Doc.# / Rev**	MPCF-1121/1
Engr. Date	8/21/2015	**Doc. Approved By**	M. Campbell	**Doc. Issued**	9/20/2019

Motor Connection Diagrams
6 Leads

Across the Line Starting / Run - Delta:

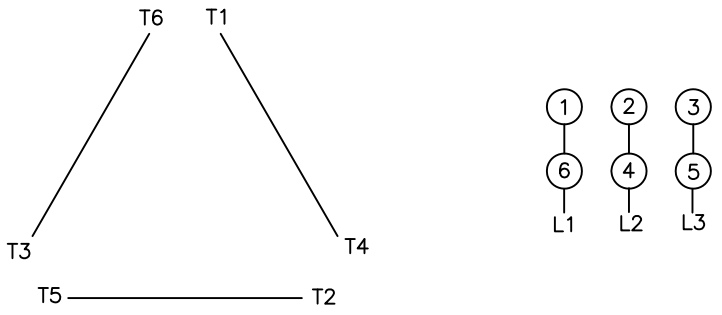

Alternate Starting Connection - Wye:

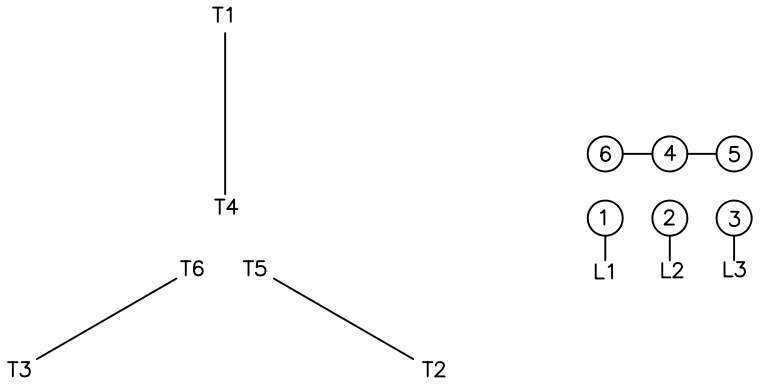

Switch L1 and L2 to reverse rotation