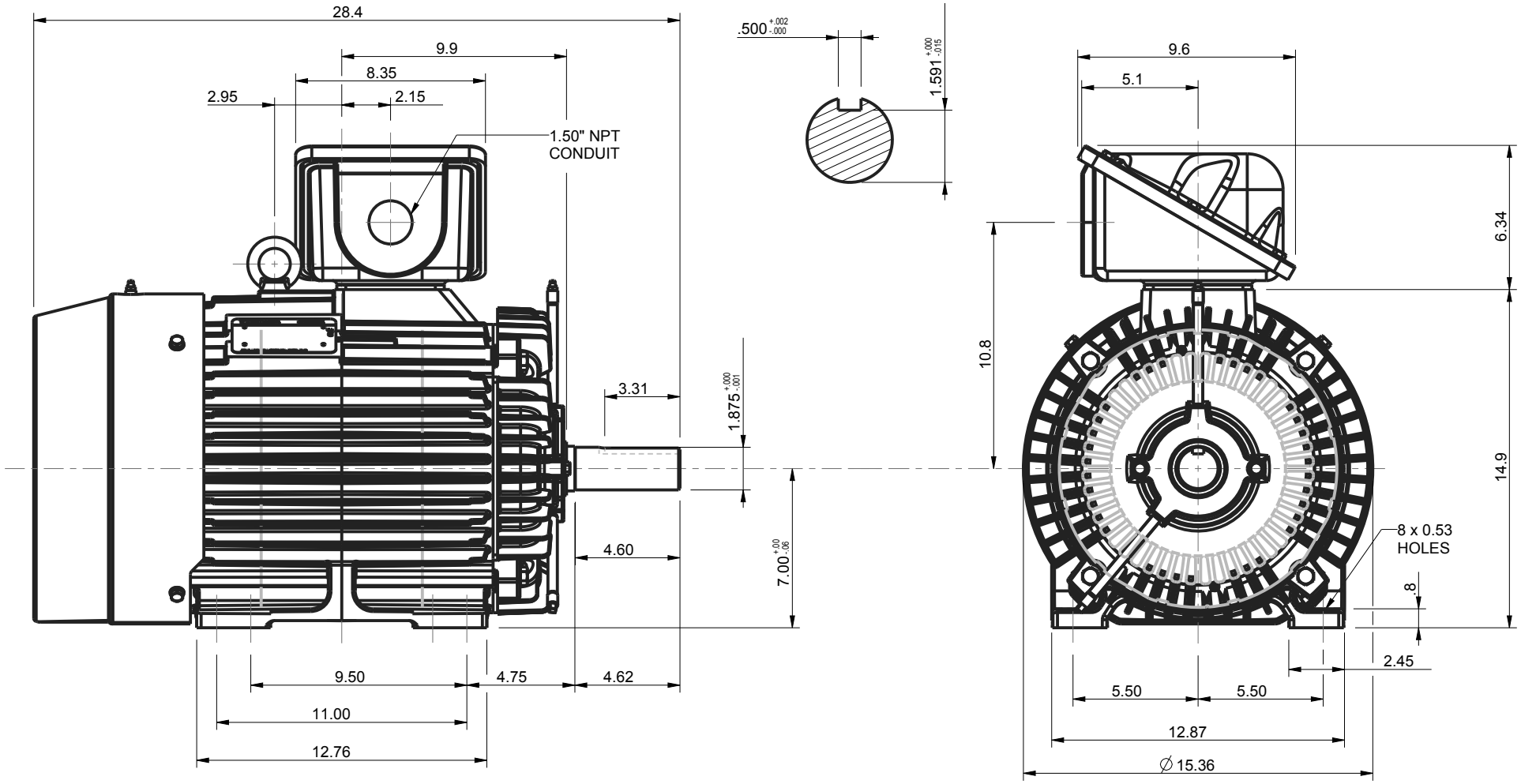

NOTES:
1. MAIN CONDUIT BOX MAY BE ROTATED IN 90° INCREMENTS
2. STANDARD PRODUCT USE BI-DIRECTIONAL FAN. OPPOSITE ROTATION AVAILABLE ONLY BY CONNECTION CHANGE.
3. KEY DIMENSIONS EQUAL 0.500" x 0.500" x 3.25" (MOTOR SUPPLIED WITH KEY)

UNITS: INCHES

TOSHIBA RESERVES THE RIGHT TO MAKE CHANGES OF TECHNICAL IMPROVEMENT WITHOUT NOTICE. DO NOT USE FOR CONSTRUCTION, INSTALLATION, OR APPLICATION PURPOSES UNLESS THE DRAWING IS CERTIFIED.

280T TEFC FRAME
F3 ASSEMBLY

MSDLV019-05

TOLERANCES

.X	.1
.XX	.03
.XXX	.005
.XXXX	.0005

MAXIMUM MOTOR WEIGHT
lbs.
kgs.

NO	REVISION	DRAWN BY	DATE	CHECK
0	FIRST ISSUE (OVERRIDE 'R' DIMENSION)	M. O'DOWD	04/01/13	JR

XT SERIES

DRAWN BY: M. O'DOWD
CHECK BY: J. RUSSELL
APPROVED BY:

TOSHIBA
TOSHIBA INTERNATIONAL CORPORATION

www.toshiba.com/ind

Issued Date	7/19/2021	Transmit #	
Issued By	dschoeck	Issued Rev	

TOSHIBA
Leading Innovation >>>

TYPICAL MOTOR PERFORMANCE DATA

Model: 0206SDSR41A-P3

HP	kW	Pole	FL RPM	Frame	Voltage	Hz	Phase	FL Amps
20	15	6	1170	286T	230/460	60	3	50/25
Enclosure	**IP**	**Ins. Class**	**S.F.**	**Duty**	**NEMA Nom. Eff.**	**NEMA Design**	**kVA Code**	**Ambient (°C)**
TEFC	55	F	1.15	CONT	91.7	B		40 C

Load	HP	kW	Amperes	Efficiency (%)	Power Factor (%)
Full Load	20.00	14.9	25	91.7	79.9
¾ Load	15.00	11.2	20	91.4	74.4
½ Load	10.00	7.5	16.4	89.7	63.4
¼ Load	5.00	3.7	13.5	83.0	41.6
No Load			11.2		5.2
Locked Rotor			145		44.4

Torque				Rotor wk² Inertia
Full Load (lb-ft)	Locked Rotor (% FLT)	Pull Up (% FLT)	Break Down (% FLT)	(lb-ft²)
89.8	255	225	275	6.10

Safe Stall Time(s)		Sound Pressure dB(A) @ 1M	Bearings*		Approx. Motor Weight
Cold	Hot		DE	NDE	(lbs)
35	15	-	6310ZC3	6310ZC3	0

*Bearings are the only recommended spare part(s).

Motor Options:
Product Family:EQP Global SD
Mounting:Footed,Shaft:T Shaft

Customer	
Customer PO	
Sales Order	
Project #	

Tag:

All characteristics are average expected values.

TOSHIBA INTERNATIONAL CORPORATION · HOUSTON, TEXAS U.S.A.

Engineering	zxie	Doc. Written By	D. Suarez	Doc.# / Rev	MPCF-1119 / 0
Engr. Date	2/28/2020	Doc. Approved By	M. Campbell	Doc. Issued	6/8/2011

Issued Date	7/19/2021	Transmit #	
Issued By	dschoeck	Issued Rev	

TOSHIBA
Leading Innovation >>>

TYPICAL MOTOR PERFORMANCE DATA

Model: 0206SDSR41A-P3

HP	kW	Pole	FL RPM	Frame	Voltage	Hz	Phase	FL Amps
20	15	6	960	286T	190/380	50	3	64/32
Enclosure	**IP**	**Ins. Class**	**S.F.**	**Duty**	**NEMA Nom. Eff.**	**NEMA Design**	**kVA Code**	**Ambient (°C)**
TEFC	55	F	1.0	CONT	88.5	B		40 C

Load	HP	kW	Amperes	Efficiency (%)	Power Factor (%)
Full Load	20.00	14.9	32	91.7	78.5
¾ Load	15.00	11.2	23	92.4	74.8
½ Load	10.00	7.5	17.6	92.2	66.2
¼ Load	5.00	3.7	13.0	84.5	51.3
No Load			11.2		5.2
Locked Rotor			191		41.2

Torque				Rotor wk² Inertia
Full Load (lb-ft)	Locked Rotor (% FLT)	Pull Up (% FLT)	Break Down (% FLT)	(lb-ft²)
109	200	195	215	6.10

Safe Stall Time(s)		Sound Pressure dB(A) @ 1M	Bearings*		Approx. Motor Weight
Cold	Hot		DE	NDE	(lbs)
29	14	-	6310ZC3	6310ZC3	0

*Bearings are the only recommended spare part(s).

Motor Options:
Product Family:EQP Global SD
Mounting:Footed,Shaft:T Shaft

Customer	
Customer PO	
Sales Order	
Project #	

Tag:

All characteristics are average expected values.

TOSHIBA INTERNATIONAL CORPORATION · HOUSTON, TEXAS U.S.A.

Engineering	jhock	**Doc. Written By**	D. Suarez	**Doc.# / Rev**	MPCF-1119 / 0
Engr. Date	6/17/2014	**Doc. Approved By**	M. Campbell	**Doc. Issued**	6/8/2011

Issued Date	7/19/2021	Transmit #	
Issued By	dschoeck	Issued Rev	

TOSHIBA
Leading Innovation >>>

SPEED TORQUE/CURRENT CURVE

Model: 0206SDSR41A-P3

HP	kW	Pole	FL RPM	Frame	Voltage	Hz	Phase	FL Amps
20	15	6	1170	286T	230/460	60	3	50/25
Enclosure	**IP**	**Ins. Class**	**S.F.**	**Duty**	**NEMA Nom. Eff.**	**NEMA Design**	**kVA Code**	**Ambient (°C)**
TEFC	55	F	1.15	CONT	91.7	B		40 C

Locked Rotor Amps	Rotor wk² Inertia (lb-ft²)	Torque			
		Full Load (lb-ft)	Locked Rotor (%)	Pull Up (%)	Break Down (%)
145	6.10	89.8	255	225	275

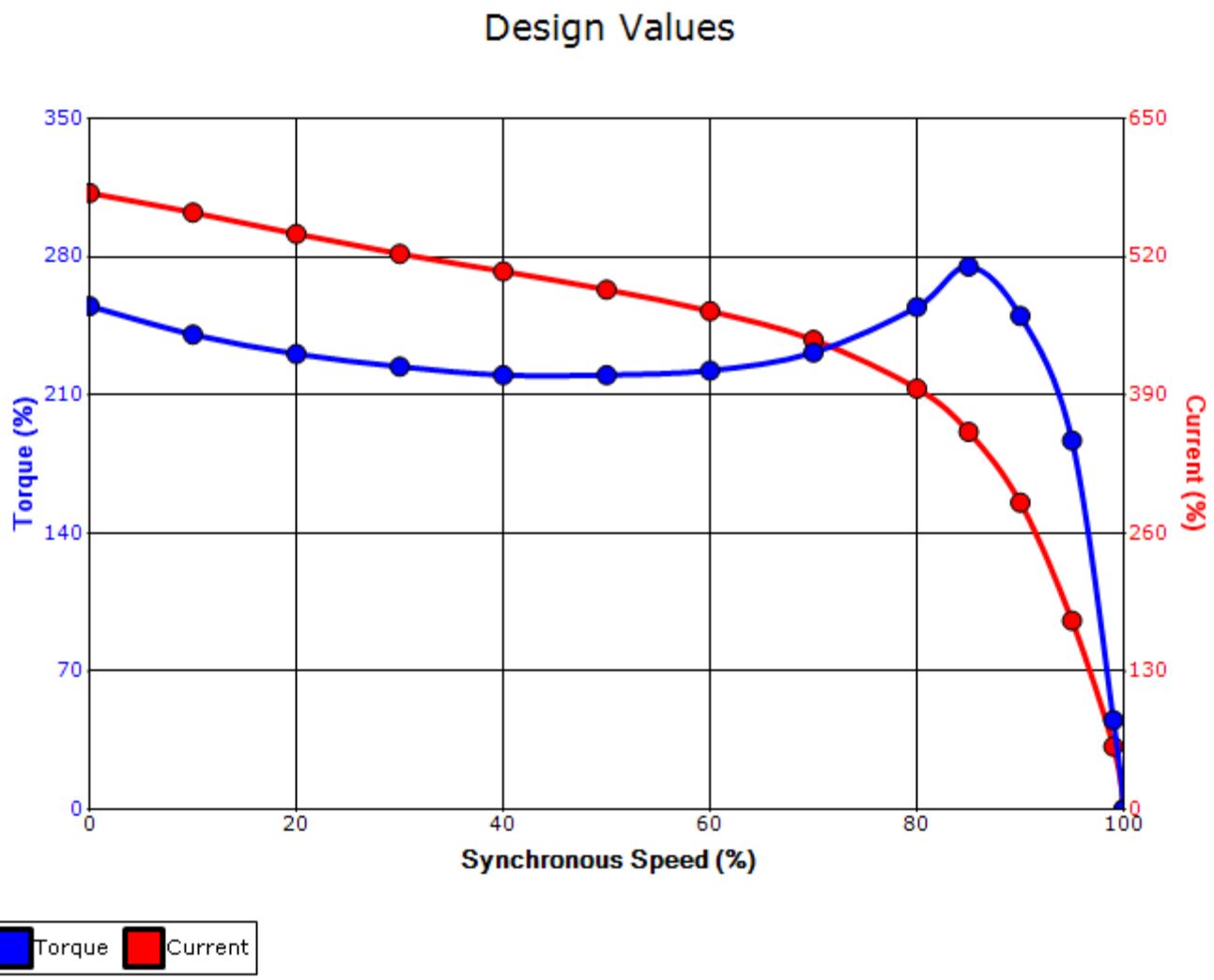

Customer			**wk² Load Inertia (lb-ft²)**	-
Customer PO			**Load Type**	-
Sales Order			**Voltage (%)**	100
Project #			**Accel. Time**	-

Tag:

All characteristics are average expected values.

TOSHIBA INTERNATIONAL CORPORATION · HOUSTON, TEXAS U.S.A.

Engineering	zxie	**Doc. Written By**	D. Suarez	**Doc.# / Rev**	MPCF-1121 / 0
Engr. Date	2/28/2020	**Doc. Approved By**	M. Campbell	**Doc. Issued**	6/8/2011

Issued Date	7/19/2021	Transmit #	
Issued By	dschoeck	Issued Rev	

TOSHIBA
Leading Innovation >>>

SPEED TORQUE/CURRENT CURVE

Model: 0206SDSR41A-P3

HP	kW	Pole	FL RPM	Frame	Voltage	Hz	Phase	FL Amps
20	15	6	960	286T	190/380	50	3	64/32
Enclosure	**IP**	**Ins. Class**	**S.F.**	**Duty**	**NEMA Nom. Eff.**	**NEMA Design**	**kVA Code**	**Ambient (°C)**
TEFC	55	F	1.0	CONT	88.5	B		40 C

Locked Rotor Amps	Rotor wk² Inertia (lb-ft²)	Torque			
		Full Load (lb-ft)	Locked Rotor (%)	Pull Up (%)	Break Down (%)
191	6.10	109	200	195	215

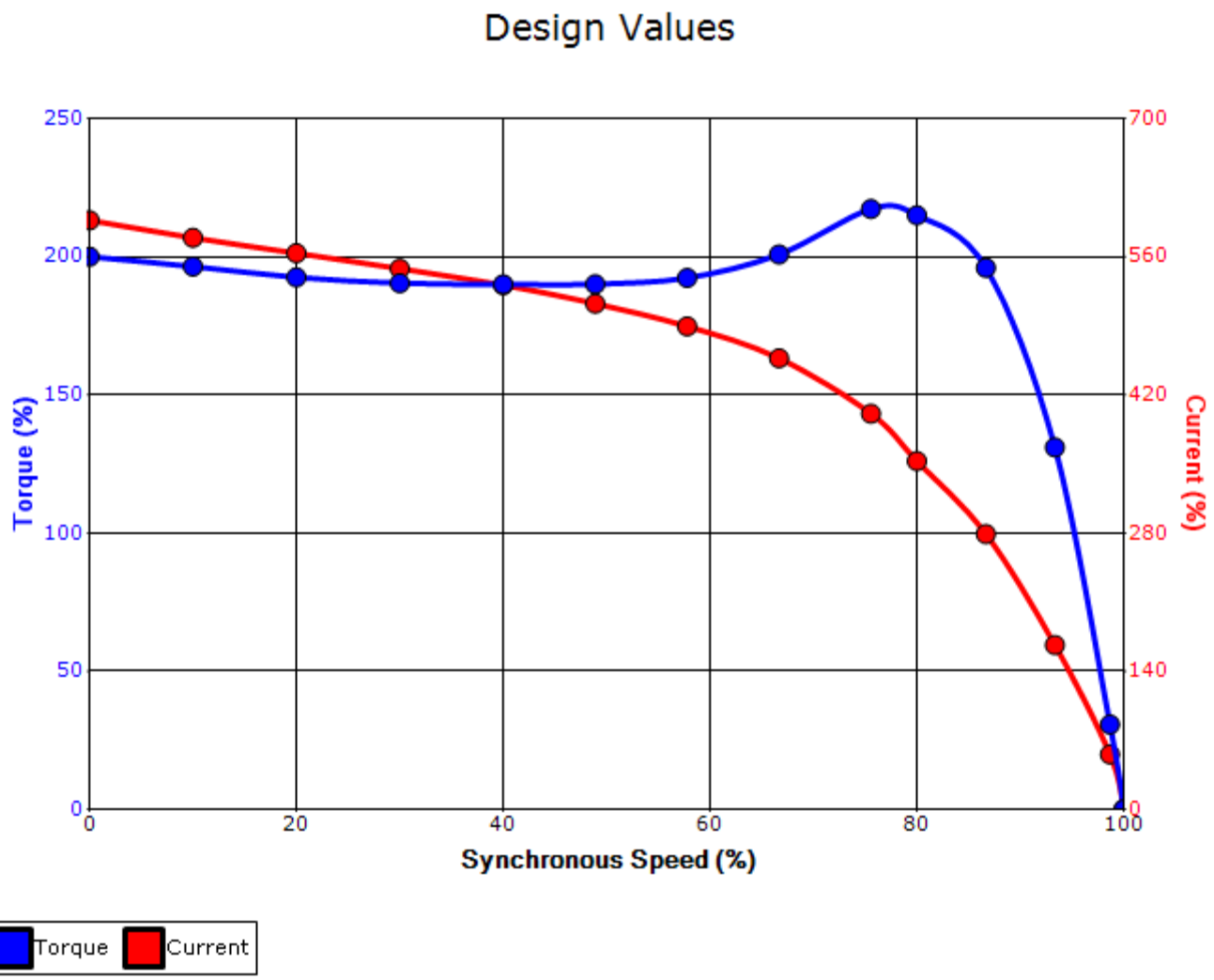

Customer			**wk² Load Inertia (lb-ft²)**	-
Customer PO			**Load Type**	-
Sales Order			**Voltage (%)**	100
Project #			**Accel. Time**	-

Tag:

All characteristics are average expected values.

TOSHIBA INTERNATIONAL CORPORATION · HOUSTON, TEXAS U.S.A.

Engineering	jhock	**Doc. Written By**	D. Suarez	**Doc.# / Rev**	MPCF-1121 / 0
Engr. Date	6/17/2014	**Doc. Approved By**	M. Campbell	**Doc. Issued**	6/8/2011

Motor Connection Diagrams
12 Leads

Across-the-Line Starting / Running Connections

Low Voltage Delta

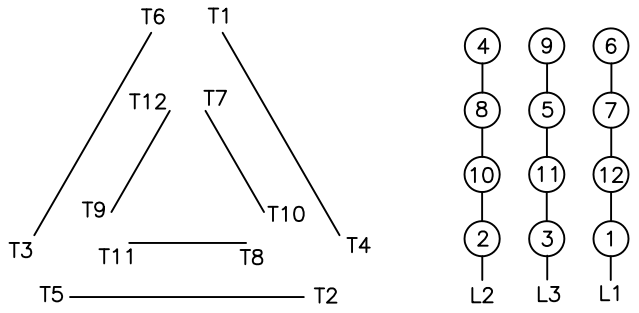

High Voltage Delta

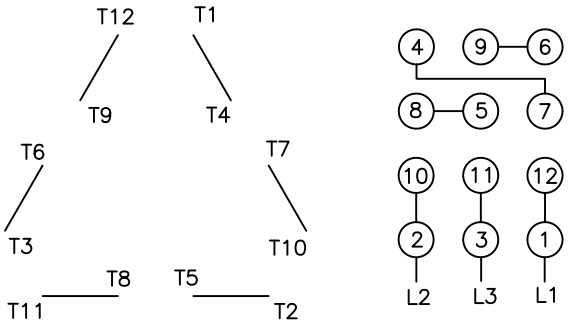

Switch L1 and L2 to reverse rotation

Suitable for Wye–Delta Starting and Limited Part–Winding–Starting.
Please Contact Toshiba International for specific connections.