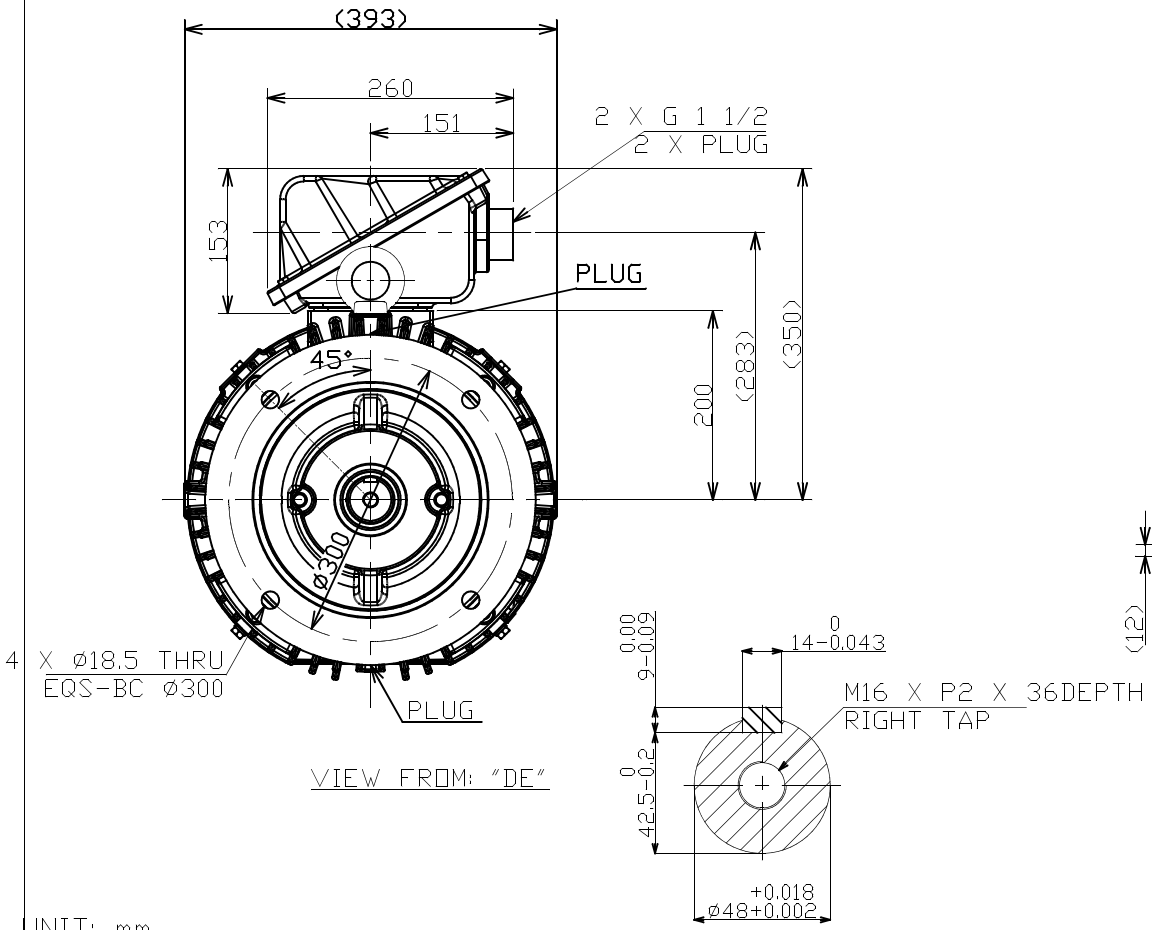

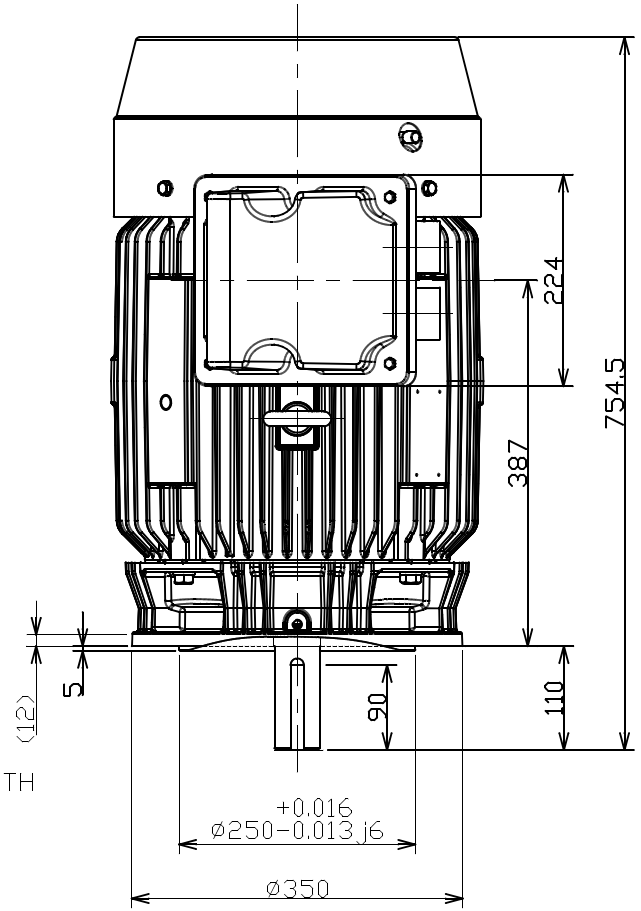

UNIT: mm

DE

ROTATION:
CCW
VIEW

TOSHIBA RESERVES THE RIGHT TO MAKE CHANGES OF TECHNICAL IMPROVEMENT WITHOUT NOTICE. DO NOT USE FOR CONSTRUCTION, INSTALLATION, OR APPLICATION PURPOSES UNLESS THE DRAWING IS CERTIFIED.

B5-FLANGE MOTOR
OL DRAWING IEC GLOBAL

TYPE: 2-4-6P - 400V

FRAME: 180L

3HFN000247

TOSHIBA
TOSHIBA INTERNATIONAL CORPORATION

TOLERANCES

X.	±2.0
X.X	±0.5
X.XX	±0.1

MAXIMUM MOTOR WEIGHT
- lbs.
- kgs.

NO	REVISION	DRAWN BY	DATE	CHECK
01	Change to new design Frame footless	T.Danh	May-21-18	B.Quynh

EQP Global SD
XT SERIES

DRAWN BY: HIEN. NGUYEN
CHECK BY: B.X.QUYNH
APPROVED BY: JAY BUGBEE

www.toshiba.com/ind

TOSHIBA INTERNATIONAL CORPORATION Industrial Division / Houston Motor Plant	INDEX	MPCF-1033
	SHEET NO.	1 of 1
	ISSUED	7/31/13
	SUPERSEDES	11/8/96
	REVISION	2
SQUIRREL CAGE INDUCTION MOTOR PERFORMANCE SPECIFICATIONS	WRITTEN BY	MDC
	APPROVED BY	PAA

CUSTOMER: -
TIC SR No.: -

MOTOR NAMEPLATE DATA

H.P.:	-	VOLTS:	400	3 PH /	50 Hz	S. RPM:	1500
FRAME:	180L	ENCL:	TEFC	FLAMPS:	41	FLRPM:	1470
FORM:	FBKL1	S.F.:	-	IEC DESIGN	NE	INSUL CLASS:	F
TYPE:	TKKH	AMB.:	40°C	CODE:	-	DUTY:	Cont.
MODEL No.:	0224SDMW7JS-P			kW:	22		
NOM. EFF.:	93.0	MIN. EFF.:	-	cosØ	0.83		

AMPERAGE		**TORQUES**		****BEARINGS:**	
LOCKED ROTOR:	348	FULL LOAD (lb-ft.):	105	DRIVE END:	REFER TO NP
		LOCKED ROTOR (%):	250	OPPOSITE DRIVE END:	REFER TO NP
		BREAK DOWN (%):	335		

EFFICIENCY		**POWER FACTOR**	
FULL LOAD:	93.2	FULL LOAD:	83.2
3/4 LOAD:	93.0	3/4 LOAD:	78.6
1/2 LOAD:	91.7	1/2 LOAD:	68.5

ALL CHARACTERISTICS ARE AVERAGE EXPECTED VALUES BASED UPON RATED VOLTAGE, FREQUENCY AND SINEWAVE POWER INPUT.

THE DECLARED LOCKED ROTOR CURRENT HAS A TOLERANCE OF 20%.

* TEMPERATURE RISE WILL BE CONSISTENT WITH INSULATION, AMBIENT AND SERVICE FACTOR AS DEFINED BY NEMA-MG-12 OR -20.

** BEARINGS ARE THE ONLY RECOMMENDED SPARE PART(S).

CERTIFIED BY: Zichao Xie

DATE: 10/18/2019

TOSHIBA INTERNATIONAL CORPORATION

Speed Torque/Current Curve

Model #:	0224SDMW7JS-P			***FLAmps:***	41
Enclosure:	TEFC	***Voltage:***	400 V	***Frame:***	180L
Pole:	4	***Frequency:***	3 PH / 50 Hz	***Ins. Class:***	F
KW:	22	***Rotor Inertia:***	5.5 lb-ft²	***Date:***	10/18/2019
FLRPM:	1470	***Load Inertia:***	N/A	***File:***	GH4022 (22kW)

Locked Rotor Amps:	348 A	***Load Type:***	N/A
Locked Rotor Torque:	250%	***Starting at:***	N/A
Breakdown Torque:	335%	***Accel. Time:***	N/A
Rated Torque:	105 lb-ft		

Design Values

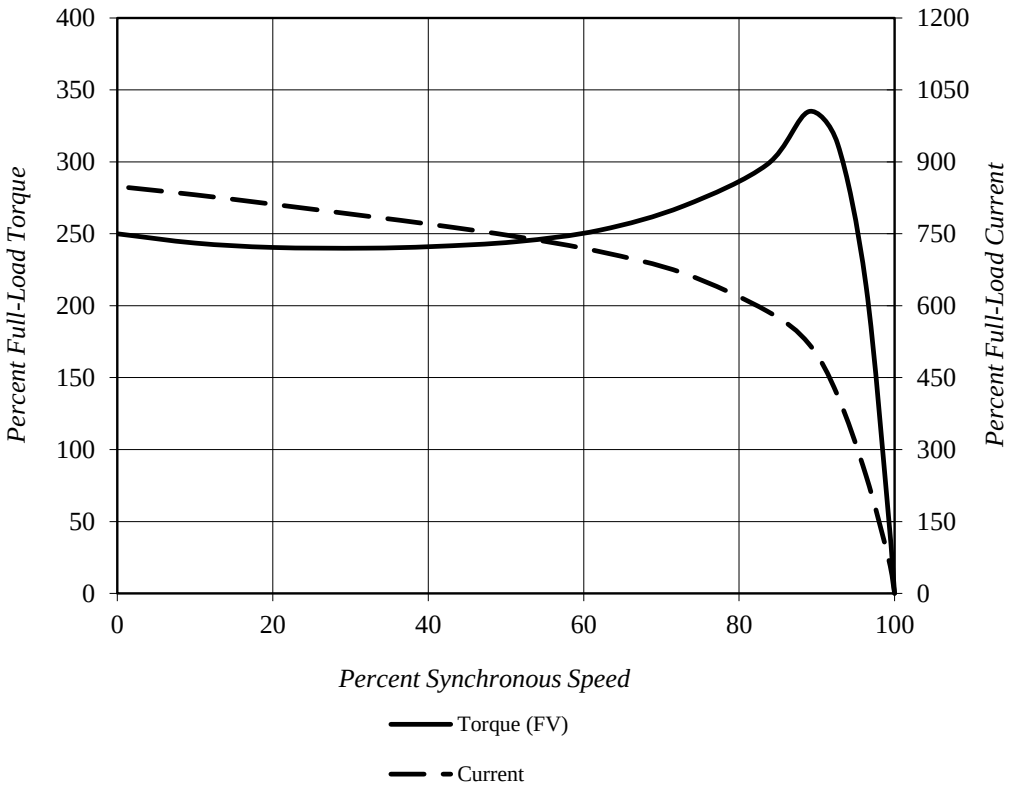

Comments: PROJECT -

D.E.Curve #: GH4022 (22kW)

Prepared by: Zichao Xie	***Checked by:***

TOSHIBA INTERNATIONAL CORPORATION

Thermal Limit & Acceleration Curves

Design Values (For Reference Only)

Model #:	0224SDMW7JS-P			***FLAmps:***	41
Enclosure:	TEFC	***Voltage:***	400 V	***Frame:***	180L
Pole:	4	***Frequency:***	3 PH / 50 Hz	***Ins. Class:***	F
KW:	22	***Rotor Inertia:***	5.5 lb-ft²	***Date:***	10/18/2019
FLRPM:	1470	***Load Inertia:***	N/A	***File:***	GH4022 (22kW)

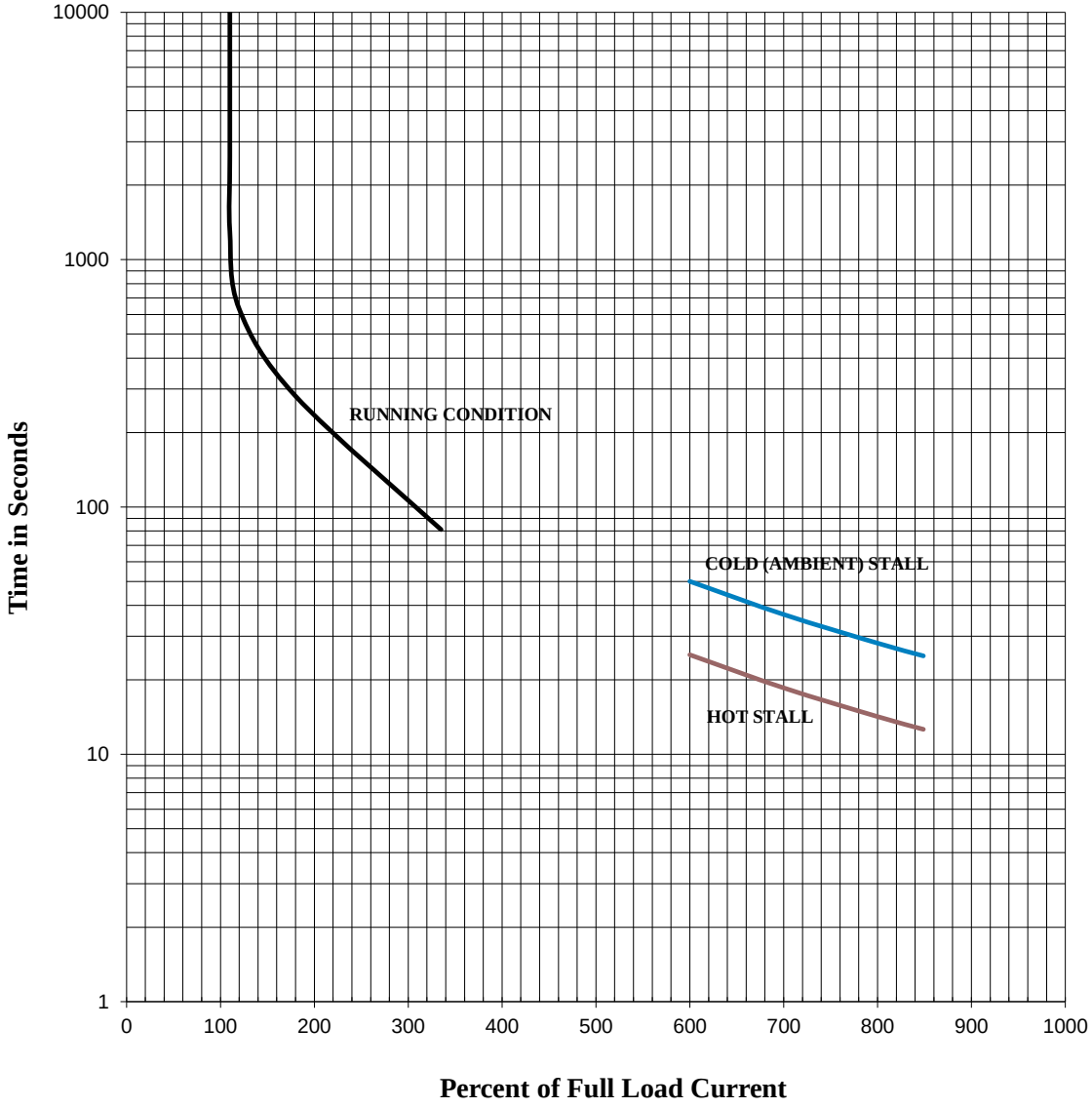

Comments: PROJECT - ***D.E.Curve #:*** GH4022 (22kW)

Prepared by: Zichao Xie	***Checked by:***

TOSHIBA INTERNATIONAL CORPORATION
Industrial Division / Houston Motor Plant

INDEX	MPCF-1033
SHEET NO.	1 of 1
ISSUED	7/31/13
SUPERSEDES	11/8/96
REVISION	2
WRITTEN BY	MDC
APPROVED BY	PAA

SQUIRREL CAGE INDUCTION MOTOR PERFORMANCE SPECIFICATIONS

CUSTOMER: -
TIC SR No.: -

MOTOR NAMEPLATE DATA

H.P.:	-	VOLTS:	415	3 PH /	50 Hz	S. RPM:	1500
FRAME:	180L	ENCL:	TEFC	FLAMPS:	40	FLRPM:	1475
FORM:	FBKL1	S.F.:	-	IEC DESIGN	NE	INSUL CLASS:	F
TYPE:	TKKH	AMB.:	40°C	CODE:	-	DUTY:	Cont.
MODEL No.:	0224SDMW7JS-P			kW:	22		
NOM. EFF.:	93.0	MIN. EFF.:	-	cosØ	0.81		

AMPERAGE		**TORQUES**		****BEARINGS:**	
LOCKED ROTOR:	363	FULL LOAD (lb-ft.):	105	DRIVE END:	REFER TO NP
		LOCKED ROTOR (%):	275	OPPOSITE DRIVE END:	REFER TO NP
		BREAK DOWN (%):	355		

EFFICIENCY		**POWER FACTOR**	
FULL LOAD:	93.6	FULL LOAD:	81.4
3/4 LOAD:	93.2	3/4 LOAD:	76.0
1/2 LOAD:	91.6	1/2 LOAD:	64.9

ALL CHARACTERISTICS ARE AVERAGE EXPECTED VALUES BASED UPON RATED VOLTAGE, FREQUENCY AND SINEWAVE POWER INPUT.

THE DECLARED LOCKED ROTOR CURRENT HAS A TOLERANCE OF 20%.

* TEMPERATURE RISE WILL BE CONSISTENT WITH INSULATION, AMBIENT AND SERVICE FACTOR AS DEFINED BY NEMA-MG-12 OR -20.

** BEARINGS ARE THE ONLY RECOMMENDED SPARE PART(S).

CERTIFIED BY: Zichao Xie

DATE: 10/18/2019

TOSHIBA INTERNATIONAL CORPORATION

Speed Torque/Current Curve

Model #:	0224SDMW7JS-P			***FLAmps:***	40
Enclosure:	TEFC	***Voltage:***	415 V	***Frame:***	180L
Pole:	4	***Frequency:***	3 PH / 50 Hz	***Ins. Class:***	F
KW:	22	***Rotor Inertia:***	5.5 lb-ft²	***Date:***	10/18/2019
FLRPM:	1475	***Load Inertia:***	N/A	***File:***	GH4022 (22kW)

Locked Rotor Amps:	363 A	***Load Type:***	N/A
Locked Rotor Torque:	275%	***Starting at:***	N/A
Breakdown Torque:	355%	***Accel. Time:***	N/A
Rated Torque:	105 lb-ft		

Design Values

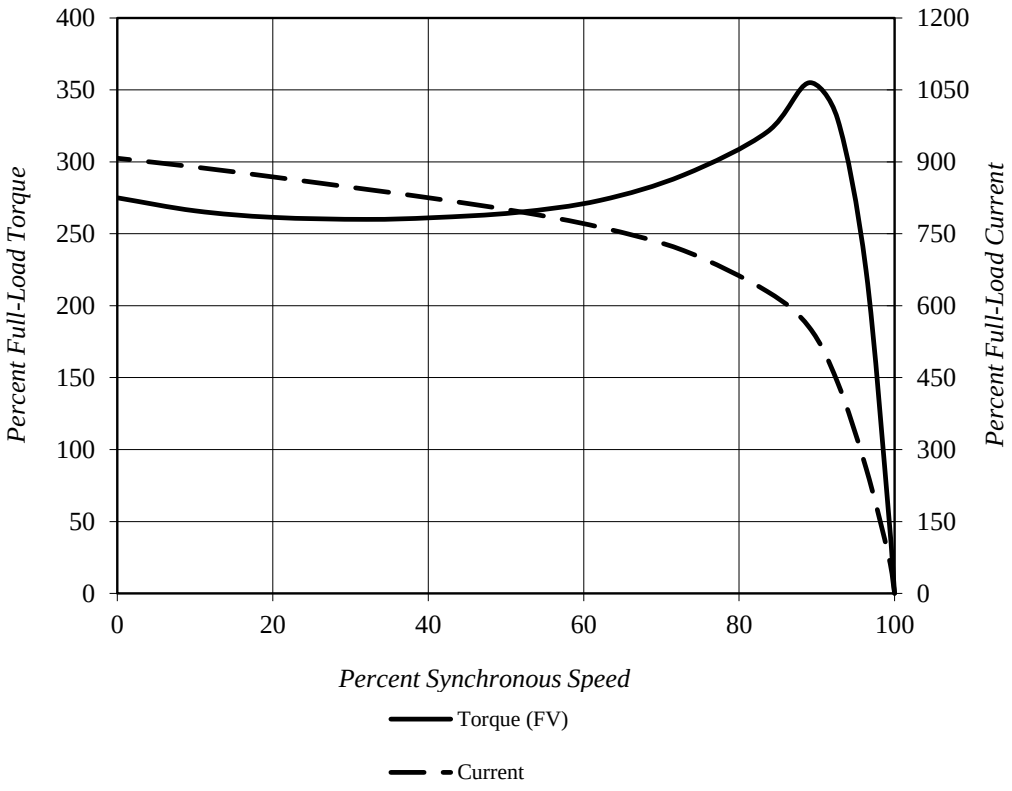

Comments: PROJECT - ***D.E.Curve #:*** GH4022 (22kW)

Prepared by: Zichao Xie	***Checked by:***

TOSHIBA INTERNATIONAL CORPORATION

Thermal Limit & Acceleration Curves

Design Values (For Reference Only)

Model #:	0224SDMW7JS-P			***FLAmps:***	40
Enclosure:	TEFC	***Voltage:***	415 V	***Frame:***	180L
Pole:	4	***Frequency:***	3 PH / 50 Hz	***Ins. Class:***	F
KW:	22	***Rotor Inertia:***	5.5 lb-ft²	***Date:***	10/18/2019
FLRPM:	1475	***Load Inertia:***	N/A	***File:***	GH4022 (22kW)

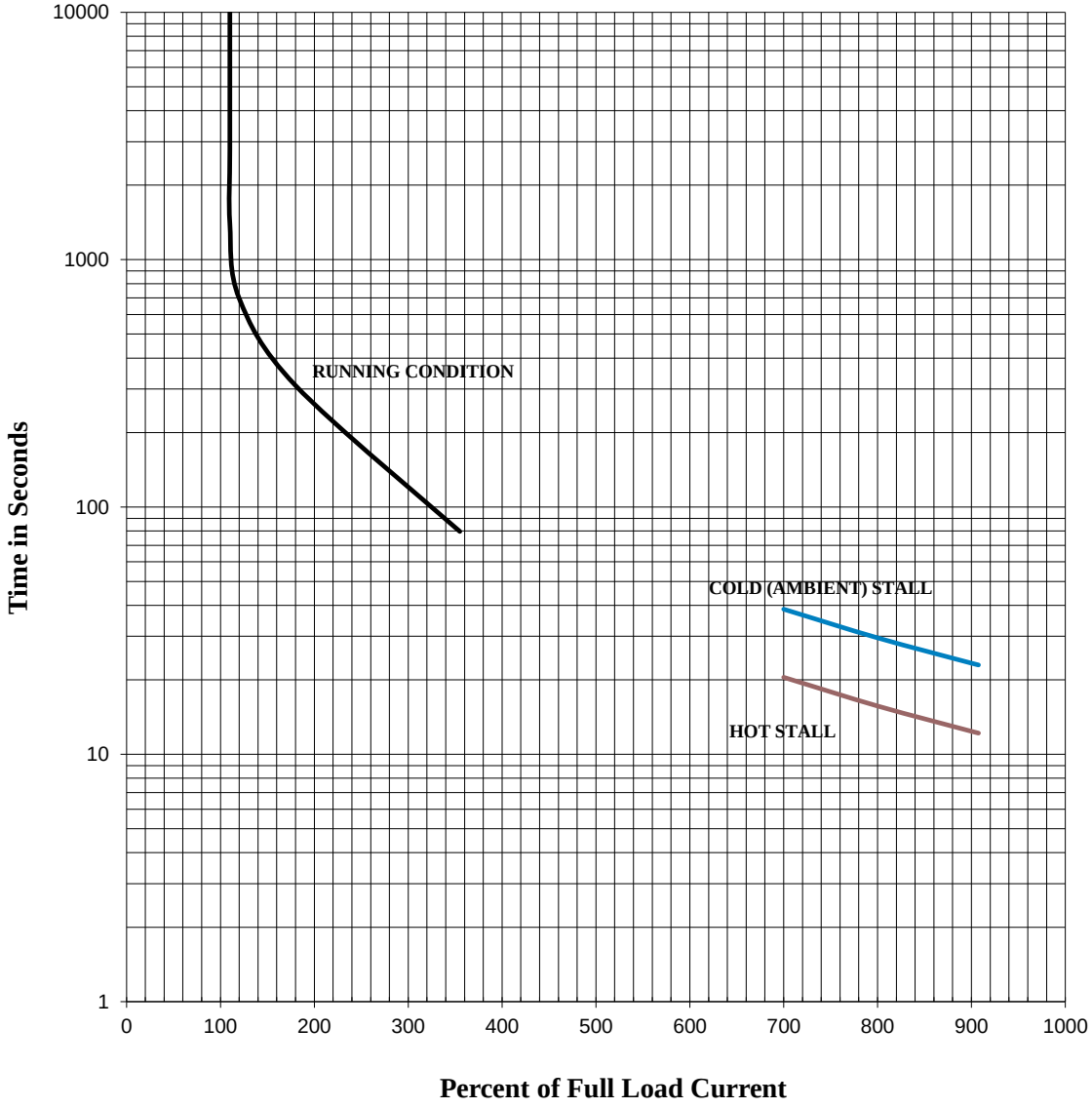

Comments: PROJECT - ***D.E.Curve #:*** GH4022 (22kW)

Prepared by: Zichao Xie ***Checked by:***

TOSHIBA INTERNATIONAL CORPORATION
Industrial Division / Houston Motor Plant

INDEX	MPCF-1033
SHEET NO.	1 of 1
ISSUED	7/31/13
SUPERSEDES	11/8/96
REVISION	2
WRITTEN BY	MDC
APPROVED BY	PAA

SQUIRREL CAGE INDUCTION MOTOR PERFORMANCE SPECIFICATIONS

CUSTOMER: -
TIC SR No.: -

MOTOR NAMEPLATE DATA

H.P.:	-	VOLTS:	380	3 PH /	50 Hz	S. RPM:	1500
FRAME:	180L	ENCL:	TEFC	FLAMPS:	42	FLRPM:	1470
FORM:	FBKL1	S.F.:	-	IEC DESIGN	NE	INSUL CLASS:	F
TYPE:	TKKH	AMB.:	40°C	CODE:	-	DUTY:	Cont.
MODEL No.:	0224SDMW7JS-P			kW:	22		
NOM. EFF.:	93.0	MIN. EFF.:	-	cosØ	0.85		

AMPERAGE		**TORQUES**		****BEARINGS:**	
LOCKED ROTOR:	328	FULL LOAD (lb-ft.):	105	DRIVE END:	REFER TO NP
		LOCKED ROTOR (%):	220	OPPOSITE DRIVE END:	REFER TO NP
		BREAK DOWN (%):	305		

EFFICIENCY		**POWER FACTOR**	
FULL LOAD:	92.9	FULL LOAD:	85.0
3/4 LOAD:	92.9	3/4 LOAD:	81.5
1/2 LOAD:	91.8	1/2 LOAD:	72.9

ALL CHARACTERISTICS ARE AVERAGE EXPECTED VALUES BASED UPON RATED VOLTAGE, FREQUENCY AND SINEWAVE POWER INPUT.

THE DECLARED LOCKED ROTOR CURRENT HAS A TOLERANCE OF 20%.

* TEMPERATURE RISE WILL BE CONSISTENT WITH INSULATION, AMBIENT AND SERVICE FACTOR AS DEFINED BY NEMA-MG-12 OR -20.

** BEARINGS ARE THE ONLY RECOMMENDED SPARE PART(S).

CERTIFIED BY: Zichao Xie

DATE: 10/18/2019

TOSHIBA INTERNATIONAL CORPORATION

Speed Torque/Current Curve

Model #:	0224SDMW7JS-P			***FLAmps:***	42
Enclosure:	TEFC	***Voltage:***	380 V	***Frame:***	180L
Pole:	4	***Frequency:***	3 PH / 50 Hz	***Ins. Class:***	F
KW:	22	***Rotor Inertia:***	5.5 lb-ft²	***Date:***	10/18/2019
FLRPM:	1470	***Load Inertia:***	N/A	***File:***	GH4022 (22kW)

Locked Rotor Amps:	328 A	***Load Type:***	N/A
Locked Rotor Torque:	220%	***Starting at:***	N/A
Breakdown Torque:	305%	***Accel. Time:***	N/A
Rated Torque:	105 lb-ft		

Design Values

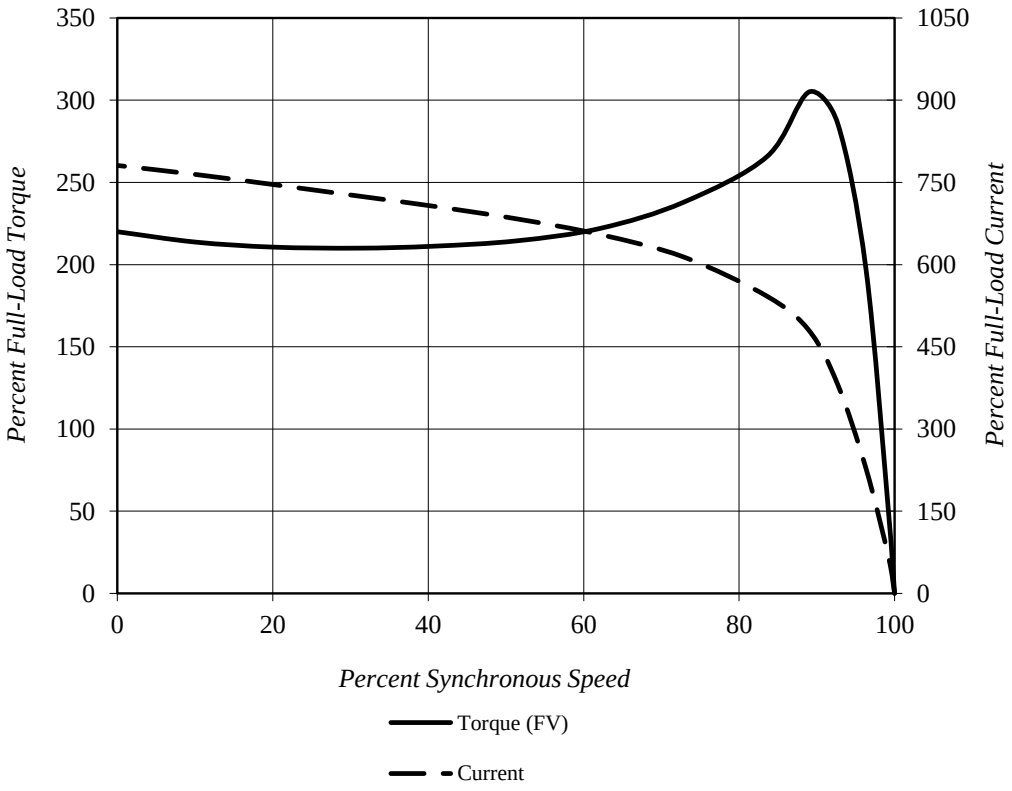

Comments: PROJECT - ***D.E.Curve #:*** GH4022 (22kW)

Prepared by: Zichao Xie	***Checked by:***

TOSHIBA INTERNATIONAL CORPORATION

Thermal Limit & Acceleration Curves

Design Values (For Reference Only)

Model #:	0224SDMW7JS-P			***FLAmps:***	42
Enclosure:	TEFC	***Voltage:***	380 V	***Frame:***	180L
Pole:	4	***Frequency:***	3 PH / 50 Hz	***Ins. Class:***	F
KW:	22	***Rotor Inertia:***	5.5 lb-ft²	***Date:***	10/18/2019
FLRPM:	1470	***Load Inertia:***	N/A	***File:***	GH4022 (22kW)

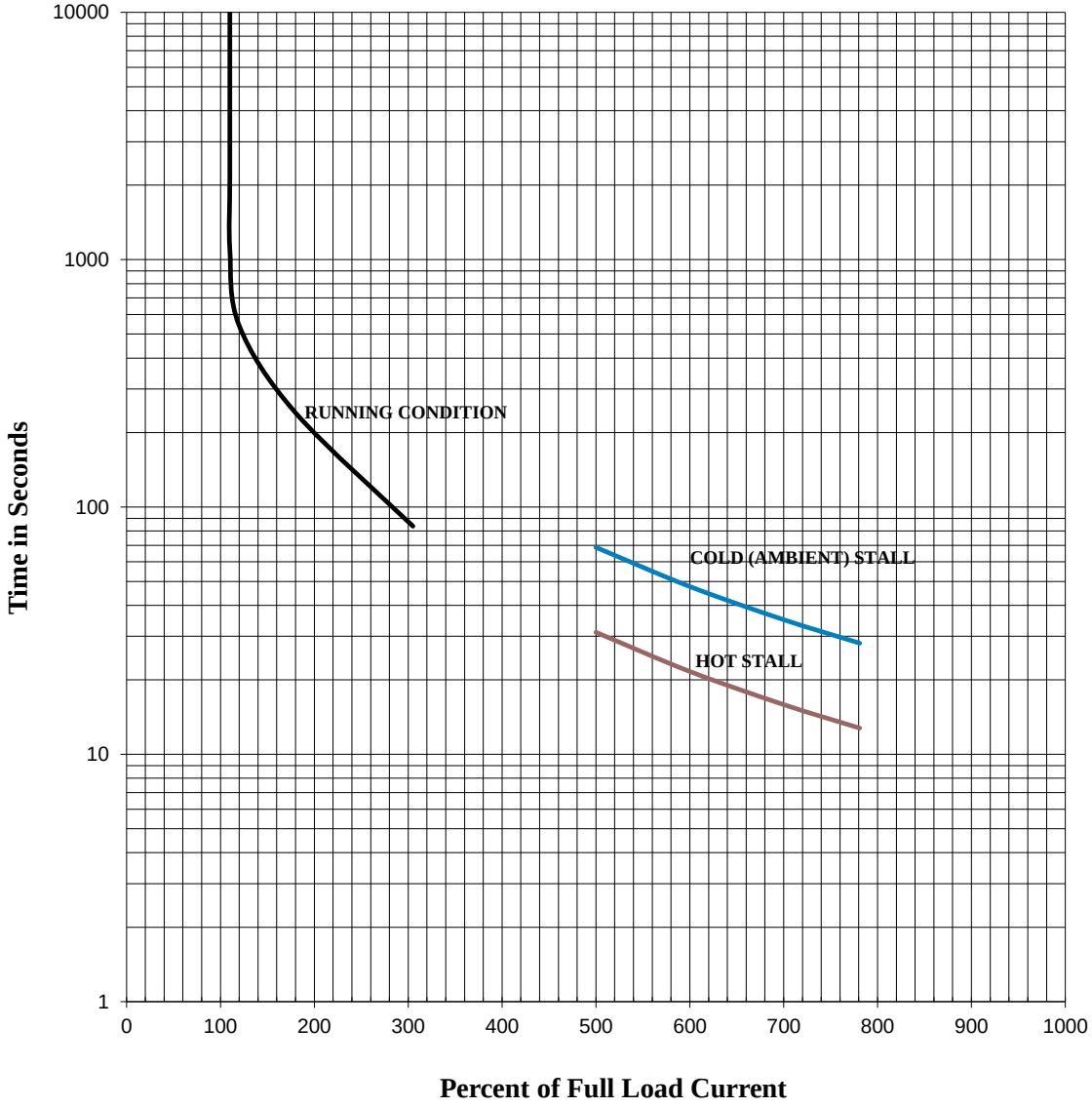

Comments: PROJECT - ***D.E.Curve #:*** GH4022 (22kW)

Prepared by: Zichao Xie	***Checked by:***

TOSHIBA INTERNATIONAL CORPORATION Industrial Division / Houston Motor Plant	INDEX	MPCF-1033
	SHEET NO.	1 of 1
	ISSUED	7/31/13
	SUPERSEDES	11/8/96
	REVISION	2
SQUIRREL CAGE INDUCTION MOTOR PERFORMANCE SPECIFICATIONS	WRITTEN BY	MDC
	APPROVED BY	PAA

CUSTOMER: -
TIC SR No.: -

MOTOR NAMEPLATE DATA

H.P.:	30	VOLTS:	460	3 PH /	60 Hz	S. RPM:	1800
FRAME:	180L	ENCL:	TEFC	FLAMPS:	35	FLRPM:	1775
FORM:	FBKL1	S.F.:	1.15	NEMA DESIGN:	A	INSUL CLASS:	F
TYPE:	TKKH	AMB.:	40°C	CODE:	L	DUTY:	Cont.
MODEL No.:	0224SDMW7JS-P			kW:	22		
NOM. EFF.:	93.6	MIN. EFF.:	-	P.F.:	83.5		

AMPERAGE		**TORQUES**		****BEARINGS:**	
LOCKED ROTOR:	340	FULL LOAD (lb-ft.):	87	DRIVE END:	REFER TO NP
		LOCKED ROTOR (%):	260	OPPOSITE DRIVE END:	REFER TO NP
		BREAK DOWN (%):	370		

EFFICIENCY		**POWER FACTOR**	
FULL LOAD:	93.9	FULL LOAD:	83.5
3/4 LOAD:	93.3	3/4 LOAD:	78.3
1/2 LOAD:	91.5	1/2 LOAD:	67.6

ALL CHARACTERISTICS ARE AVERAGE EXPECTED VALUES BASED UPON RATED VOLTAGE, FREQUENCY AND SINEWAVE POWER INPUT.

THE DECLARED LOCKED ROTOR CURRENT HAS A TOLERANCE OF 20%.

* TEMPERATURE RISE WILL BE CONSISTENT WITH INSULATION, AMBIENT AND SERVICE FACTOR AS DEFINED BY NEMA-MG-12 OR -20.

** BEARINGS ARE THE ONLY RECOMMENDED SPARE PART(S).

CERTIFIED BY: Zichao Xie

DATE: 10/18/2019

TOSHIBA INTERNATIONAL CORPORATION

Speed Torque/Current Curve

Model #:	0224SDMW7JS-P			***FLAmps:***	35
Enclosure:	TEFC	***Voltage:***	460 V	***Frame:***	180L
Pole:	4	***Frequency:***	3 PH / 60 Hz	***Ins. Class:***	F
HP:	30	***Rotor Inertia:***	5.5 lb-ft²	***Date:***	10/18/2019
FLRPM:	1775	***Load Inertia:***	N/A	***File:***	GH4022 (22kW)

Locked Rotor Amps:	340 A	***Load Type:***	N/A
Locked Rotor Torque:	260%	***Starting at:***	N/A
Breakdown Torque:	370%	***Accel. Time:***	N/A
Rated Torque:	87 lb-ft		

Design Values

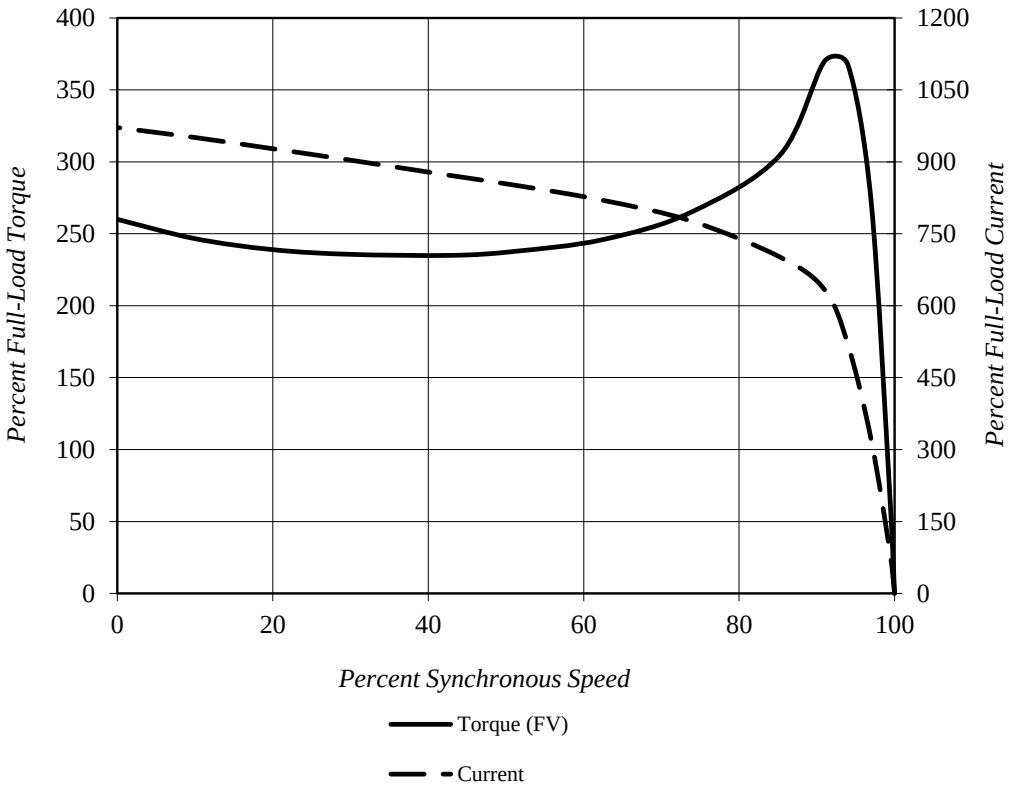

Comments: PROJECT - ***D.E.Curve #:*** GH4022 (22kW)

Prepared by: Zichao Xie	***Checked by:***

TOSHIBA INTERNATIONAL CORPORATION

Thermal Limit & Acceleration Curves

Design Values (For Reference Only)

Model #:	0224SDMW7JS-P			***FLAmps:***	35
Enclosure:	TEFC	***Voltage:***	460 V	***Frame:***	180L
Pole:	4	***Frequency:***	3 PH / 60 Hz	***Ins. Class:***	F
HP:	30	***Rotor Inertia:***	5.5 lb-ft²	***Date:***	10/18/2019
FLRPM:	1775	***Load Inertia:***	N/A	***File:***	GH4022 (22kW)

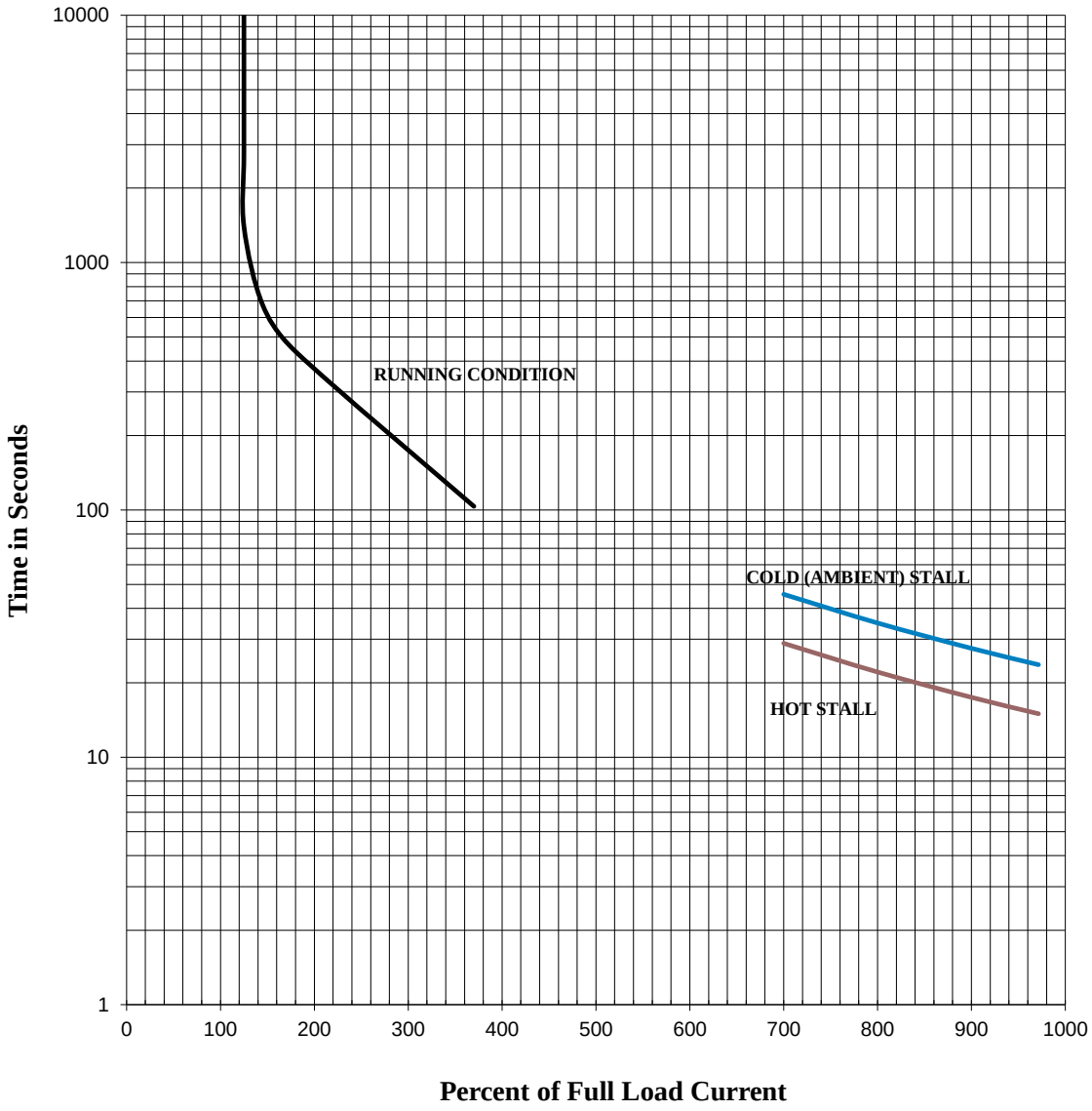

Comments: PROJECT - ***D.E.Curve #:*** GH4022 (22kW)

Prepared by: Zichao Xie	***Checked by:***