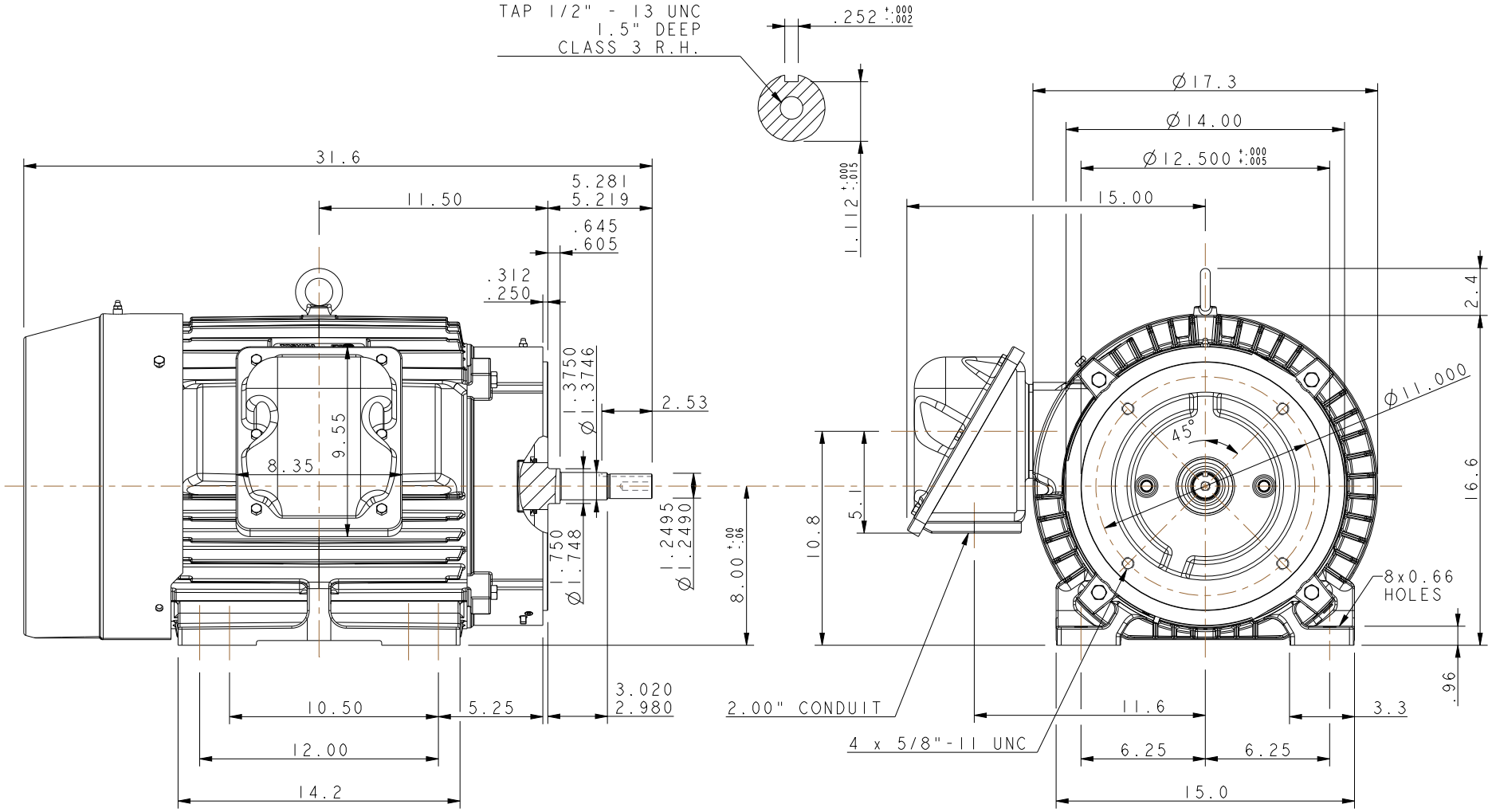


UNITS: INCHES

ROTATION FROM NDE

X CCW  CW

NOTES:

1. MAIN CONDUIT BOX MAY BE ROTATED IN 90° INCREMENTS
2. STANDARD PRODUCT USES BI-DIRECTIONAL FAN. OPPOSITE ROTATION AVAILABLE ONLY BY CONNECTION CHANGE.
3. KEY DIMENSIONS EQUAL 0.25"x 0.25"x 2.53" (MOTOR SUPPLIED WITH KEY)

TOSHIBA RESERVES THE RIGHT TO MAKE CHANGES OF TECHNICAL IMPROVEMENT AND THE DATA MAY CHANGE WITHOUT NOTICE ☐ PRELIMINARY

DO NOT USE FOR CONSTRUCTION, INSTALLATION, OR APPLICATION PURPOSES UNLESS THE DRAWING IS MARKED AS CERTIFIED ☒ CERTIFIED

TOSHIBA SEVERE DUTY EQP Global SD

www.toshiba.com/tic

TOSHIBA INTERNATIONAL CORPORATION

TOTALLY ENCLOSED FAN COOLED
HORIZONTAL FOOT MOUNTED
3 PHASE INDUCTION MOTOR
324JM/326JM F1 ASSEMBLY

DRAWING #: MDSLV108-06

REV. DATE: 10/10/22 REV. #: 4 PER.: M. O'DOWD

REV. DESCRIP.: UPDATED TOLERANCES

| | | | |
|---|---|---|---|
| Issued Date | 11/20/2024 | Transmit # | |
| Issued By | dschoeck | Issued Rev | |

TOSHIBA
Leading Innovation >>>

# TYPICAL MOTOR PERFORMANCE DATA

**Model:** 0256SDJR41M-P

| HP | kW | Pole | FL RPM | Frame | Voltage | Hz | Phase | FL Amps |
|---|---|---|---|---|---|---|---|---|
| 25 | 18.5 | 6 | 1180 | 324JM | 230/460 | 60 | 3 | 62/31 |
| **Enclosure** | **IP** | **Ins. Class** | **S.F.** | **Duty** | **NEMA Nom. Eff.** | **NEMA Design** | **kVA Code** | **Ambient (°C)** |
| TEFC | 55 | F | 1.15 | CONT | 93.0 | B | | 40 C |

| Load | HP | kW | Amperes | Efficiency (%) | Power Factor (%) |
|---|---|---|---|---|---|
| Full Load | 25.00 | 18.6 | 30 | 93.4 | 81.4 |
| ¾ Load | 18.75 | 14.0 | 24 | 93.0 | 76.4 |
| ½ Load | 12.50 | 9.3 | 19.2 | 91.5 | 66.6 |
| ¼ Load | 6.25 | 4.7 | 12.7 | 86.9 | 52.7 |
| No Load | | | 12.4 | | 4.0 |
| Locked Rotor | | | 197 | | 39.3 |

| Torque | | | | Rotor wk² Inertia |
|---|---|---|---|---|
| Full Load (lb-ft) | Locked Rotor (% FLT) | Pull Up (% FLT) | Break Down (% FLT) | (lb-ft²) |
| 111 | 245 | 155 | 275 | 11.30 |

| Safe Stall Time(s) | | Sound Pressure dB(A) @ 1M | Bearings* | | Approx. Motor Weight |
|---|---|---|---|---|---|
| Cold | Hot | | DE | NDE | (lbs) |
| 35 | 15 | - | 6312ZC3 | 6312ZC3 | 545 |

*Bearings are the only recommended spare part(s).

**Motor Options:**
Mounting:Footed,Shaft:JM Shaft

| | |
|---|---|
| Customer | |
| Customer PO | |
| Sales Order | |
| Project # | |

**Tag:**

All characteristics are average expected values.

**TOSHIBA INTERNATIONAL CORPORATION · HOUSTON, TEXAS U.S.A.**

| | | | | | |
|---|---|---|---|---|---|
| Engineering | zxie | Doc. Written By | D. Suarez | Doc.# / Rev | MPCF-1119 / 0 |
| Engr. Date | 7/15/2024 | Doc. Approved By | M. Campbell | Doc. Issued | 6/8/2011 |

| | | | |
|---|---|---|---|
| Issued Date | 11/20/2024 | Transmit # | |
| Issued By | dschoeck | Issued Rev | |

TOSHIBA
Leading Innovation >>>

# SPEED TORQUE/CURRENT CURVE

**Model:** 0256SDJR41M-P

| HP | kW | Pole | FL RPM | Frame | Voltage | Hz | Phase | FL Amps |
|---|---|---|---|---|---|---|---|---|
| 25 | 18.5 | 6 | 1180 | 324JM | 230/460 | 60 | 3 | 62/31 |
| **Enclosure** | **IP** | **Ins. Class** | **S.F.** | **Duty** | **NEMA Nom. Eff.** | **NEMA Design** | **kVA Code** | **Ambient (°C)** |
| TEFC | 55 | F | 1.15 | CONT | 93.0 | B | | 40 C |

| Locked Rotor Amps | Rotor wk² Inertia (lb-ft²) | Torque | | | |
|---|---|---|---|---|---|
| | | Full Load (lb-ft) | Locked Rotor (%) | Pull Up (%) | Break Down (%) |
| 197 | 11.30 | 111 | 245 | 155 | 275 |

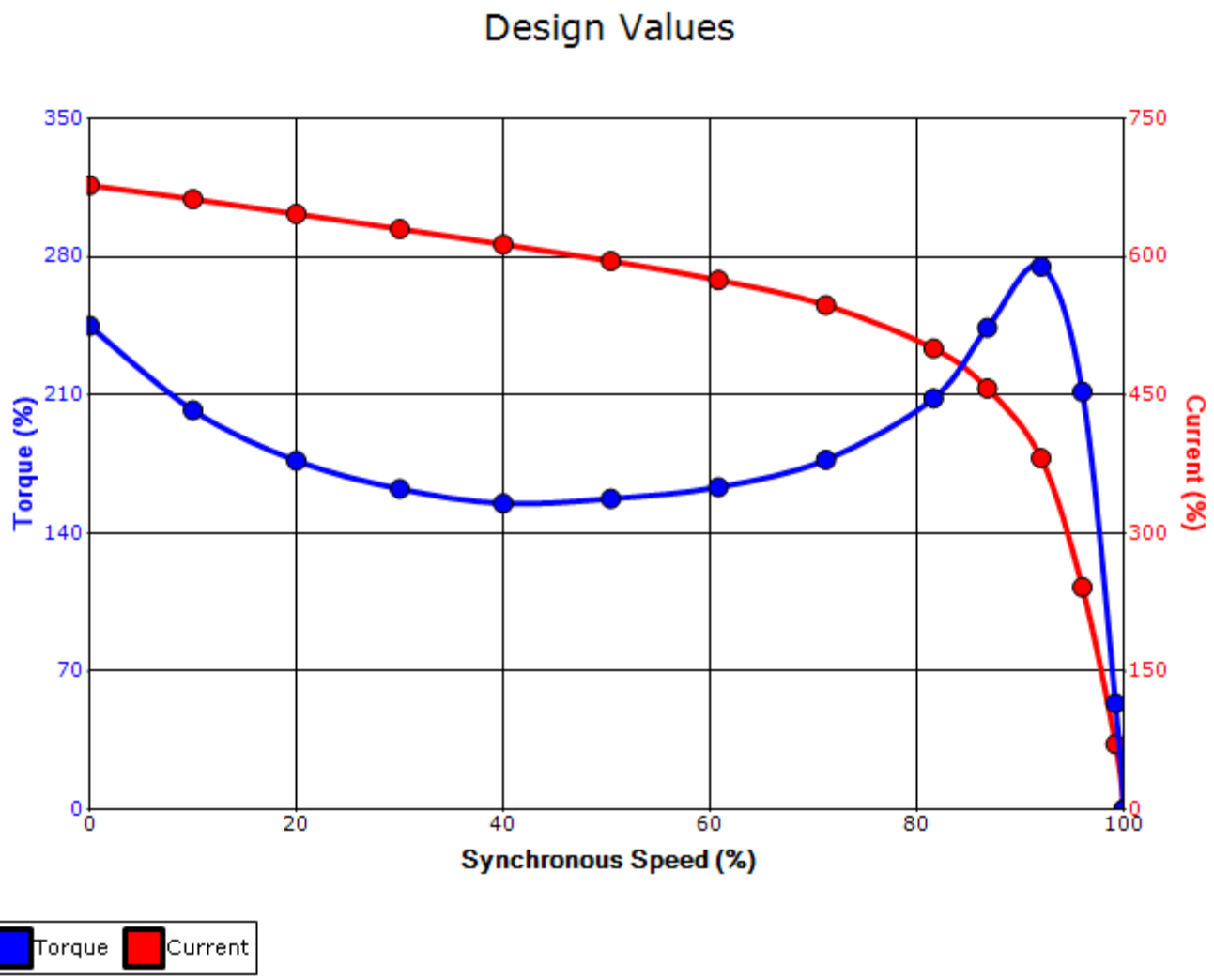


| | | | | |
|---|---|---|---|---|
| **Customer** | | | **wk² Load Inertia (lb-ft²)** | - |
| **Customer PO** | | | **Load Type** | - |
| **Sales Order** | | | **Voltage (%)** | 100 |
| **Project #** | | | **Accel. Time** | - |

**Tag:**

All characteristics are average expected values.

**TOSHIBA INTERNATIONAL CORPORATION · HOUSTON, TEXAS U.S.A.**

| | | | | | |
|---|---|---|---|---|---|
| **Engineering** | zxie | **Doc. Written By** | D. Suarez | **Doc.# / Rev** | MPCF-1121 / 0 |
| **Engr. Date** | 7/15/2024 | **Doc. Approved By** | M. Campbell | **Doc. Issued** | 6/8/2011 |

# Motor Connection Diagrams
## 12 Leads

Across-the-Line Starting / Running Connections

Low Voltage Delta

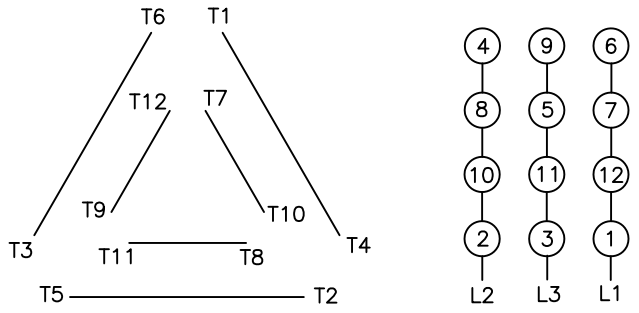


High Voltage Delta

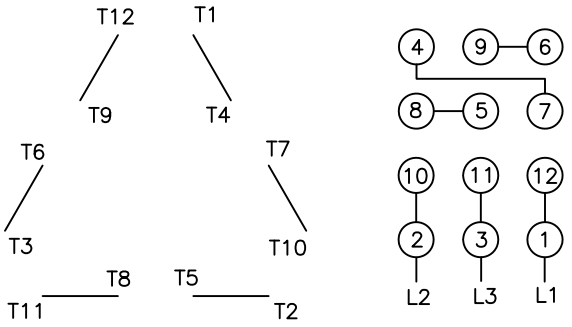


Switch L1 and L2 to reverse rotation

Suitable for Wye–Delta Starting and Limited Part–Winding–Starting.
Please Contact Toshiba International for specific connections.