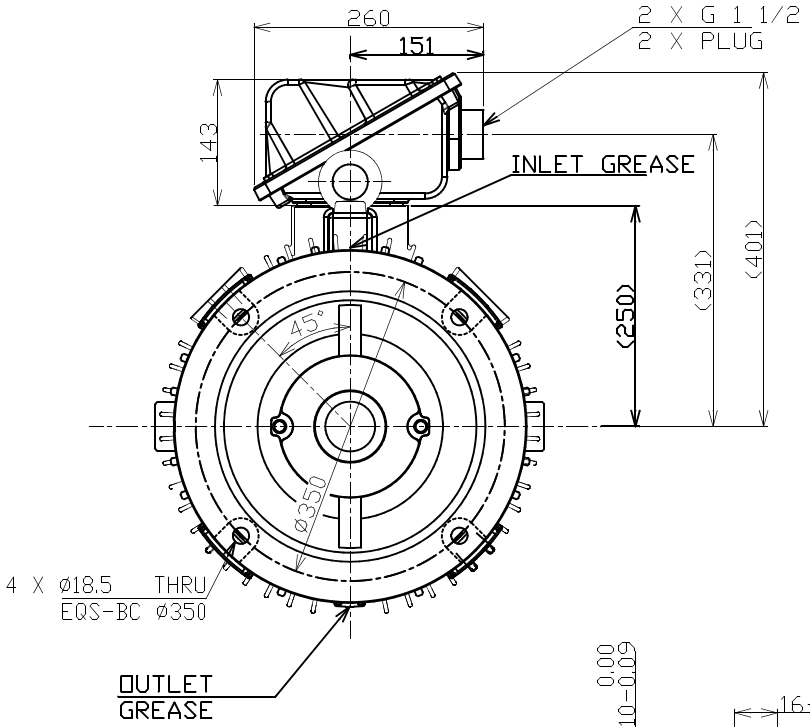


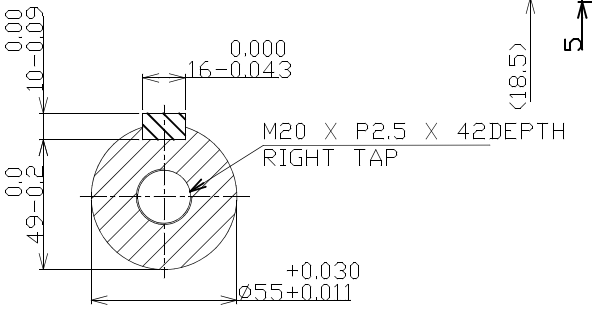


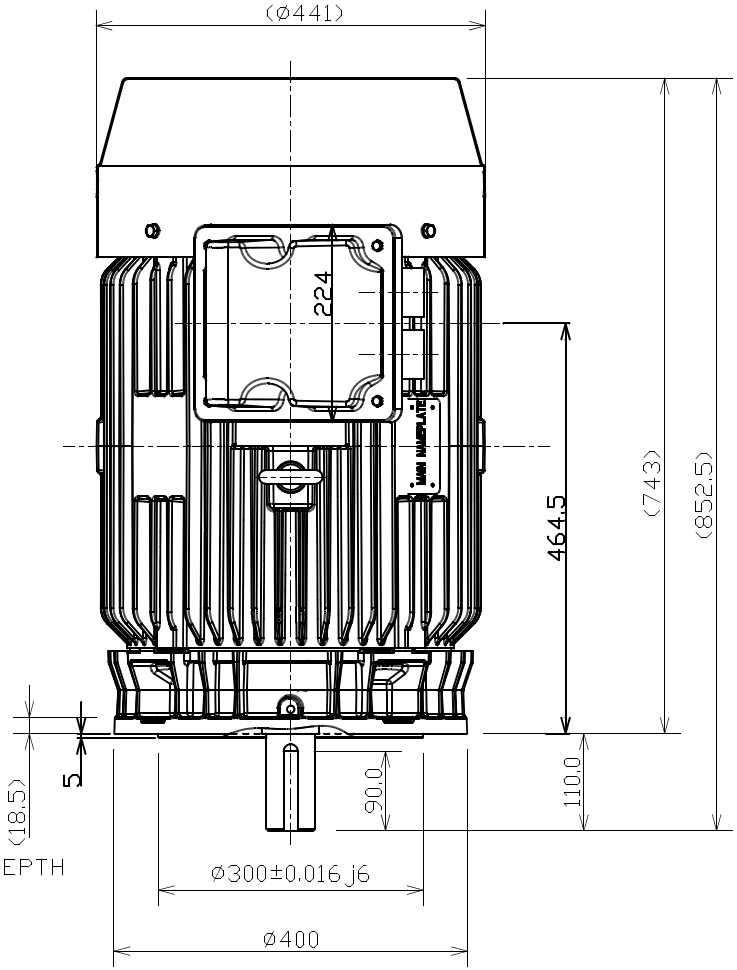


UNIT: mm

ROTATION: CCW
VIEW FROM:
ODE

TOSHIBA RESERVES THE RIGHT TO MAKE CHANGES OF TECHNICAL IMPROVEMENT WITHOUT NOTICE. DO NOT USE FOR CONSTRUCTION, INSTALLATION, OR APPLICATION PURPOSES UNLESS THE DRAWING IS CERTIFIED.

B5-FLANGE MOTOR
OL DRAWING IEC GLOBAL

TYPE: 2-4-6P - 400V

FRAME: 200L

3HFN000249

TOLERANCES

| | |
|---|---|
| X. | ±2.0 |
| X.X | ±0.5 |
| X.XX | ±0.1 |

MAXIMUM MOTOR WEIGHT

-- lbs.

-- kgs.

| NO | REVISION | DRAWN BY | DATE | CHECK |
|---|---|---|---|---|
| 01 | Change to new design Frame footless | T.Danh | May-21-18 | B.Quynh |

EQP Global SD
XT SERIES

DRAWN BY: HIEN. NGUYEN
CHECK BY: B.X.QUYNH
APPROVED BY: JAY BUGBEE

**TOSHIBA**
**TOSHIBA INTERNATIONAL CORPORATION**

www.toshiba.com/ind

# TOSHIBA INTERNATIONAL CORPORATION
## Industrial Division / Houston Motor Plant

| | |
|---|---|
| INDEX | MPCF-1033 |
| SHEET NO. | 1 of 1 |
| ISSUED | 7/31/13 |
| SUPERSEDES | 11/8/96 |
| REVISION | 2 |
| WRITTEN BY | MDC |
| APPROVED BY | PAA |

## SQUIRREL CAGE INDUCTION MOTOR PERFORMANCE SPECIFICATIONS

CUSTOMER: -
TIC SR No.: -

### MOTOR NAMEPLATE DATA

| | | | | | | | |
|---|---|---|---|---|---|---|---|
| H.P.: | - | VOLTS: | 400 | 3 PH / | 50 Hz | S. RPM: | 3000 |
| FRAME: | 200L | ENCL: | TEFC | FLAMPS: | 53 | FLRPM: | 2960 |
| FORM: | FCKL1 | S.F.: | - | IEC DESIGN | NE | INSUL CLASS: | F |
| TYPE: | TKKH | AMB.: | 40°C | CODE: | - | DUTY: | Cont. |
| MODEL No.: | 0302SDMW7JS-P | | | kW: | 30 | | |
| NOM. EFF.: | 93.3 | MIN. EFF.: | - | cosØ | 0.86 | | |

| **AMPERAGE** | | **TORQUES** | | ****BEARINGS:** | |
|---|---|---|---|---|---|
| LOCKED ROTOR: | 464 | FULL LOAD (lb-ft.): | 71 | DRIVE END: | REFER TO NP |
| | | LOCKED ROTOR (%): | 300 | OPPOSITE DRIVE END: | REFER TO NP |
| | | BREAK DOWN (%): | 360 | | |

| **EFFICIENCY** | | **POWER FACTOR** | |
|---|---|---|---|
| FULL LOAD: | 94.6 | FULL LOAD: | 86.5 |
| 3/4 LOAD: | 93.7 | 3/4 LOAD: | 83.4 |
| 1/2 LOAD: | 91.5 | 1/2 LOAD: | 76.1 |

ALL CHARACTERISTICS ARE AVERAGE EXPECTED VALUES BASED UPON RATED VOLTAGE, FREQUENCY AND SINEWAVE POWER INPUT.

THE DECLARED LOCKED ROTOR CURRENT HAS A TOLERANCE OF 20%.

* TEMPERATURE RISE WILL BE CONSISTENT WITH INSULATION, AMBIENT AND SERVICE FACTOR AS DEFINED BY NEMA-MG-12 OR -20.

** BEARINGS ARE THE ONLY RECOMMENDED SPARE PART(S).

**CERTIFIED BY:** Zichao Xie

**DATE:** 1/14/2020

# TOSHIBA INTERNATIONAL CORPORATION

## Speed Torque/Current Curve

| | | | | | |
|---|---|---|---|---|---|
| ***Model #:*** | 0302SDMW7JS-P | | | ***FLAmps:*** | 53 |
| ***Enclosure:*** | TEFC | ***Voltage:*** | 400 V | ***Frame:*** | 200L |
| ***Pole:*** | 2 | ***Frequency:*** | 3 PH / 50 Hz | ***Ins. Class:*** | F |
| ***KW:*** | 30 | ***Rotor Inertia:*** | 6.6 lb-ft² | ***Date:*** | 1/14/2020 |
| ***FLRPM:*** | 2960 | ***Load Inertia:*** | N/A | ***File:*** | GH2030 (30kW) |

| | | | |
|---|---|---|---|
| ***Locked Rotor Amps:*** | 464 A | ***Load Type:*** | N/A |
| ***Locked Rotor Torque:*** | 300% | ***Starting at:*** | N/A |
| ***Breakdown Torque:*** | 360% | ***Accel. Time:*** | N/A |
| ***Rated Torque:*** | 71 lb-ft | | |

***Design Values***

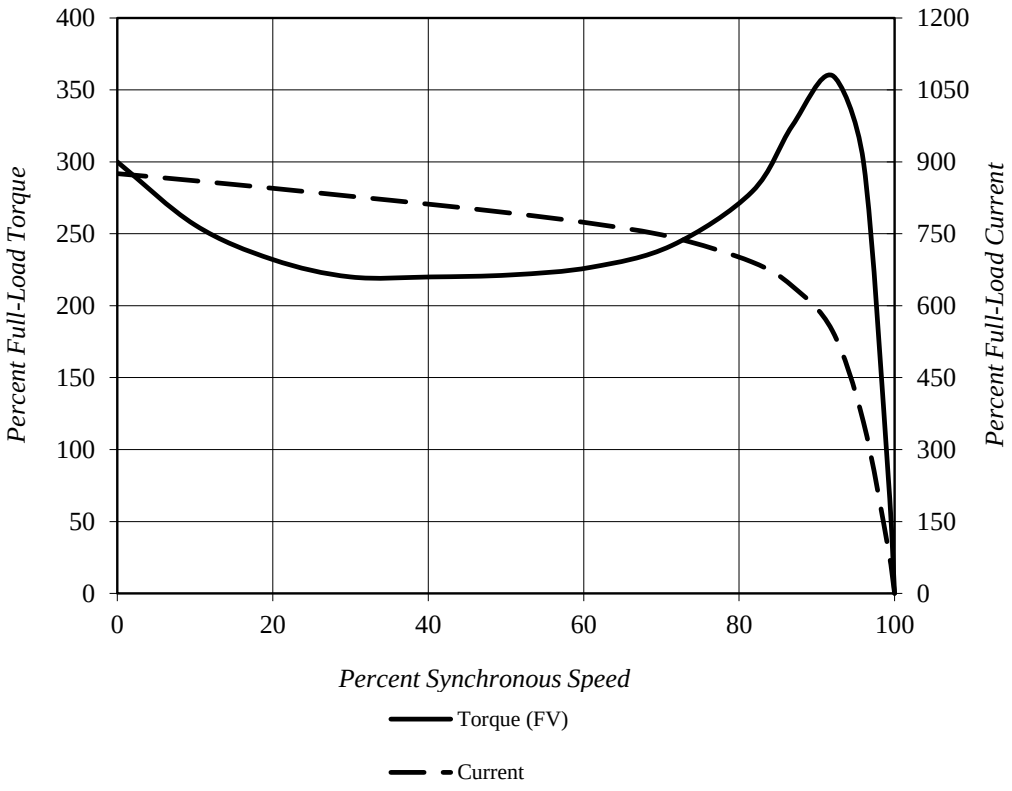


***Comments:*** PROJECT -

***D.E.Curve #:*** GH2030 (30kW)

| | |
|---|---|
| ***Prepared by:*** Zichao Xie | ***Checked by:*** |

# TOSHIBA INTERNATIONAL CORPORATION

## Thermal Limit & Acceleration Curves

***Design Values (For Reference Only)***

| | | | | | |
|---|---|---|---|---|---|
| ***Model #:*** | 0302SDMW7JS-P | | | ***FLAmps:*** | 53 |
| ***Enclosure:*** | TEFC | ***Voltage:*** | 400 V | ***Frame:*** | 200L |
| ***Pole:*** | 2 | ***Frequency:*** | 3 PH / 50 Hz | ***Ins. Class:*** | F |
| ***KW:*** | 30 | ***Rotor Inertia:*** | 6.6 lb-ft² | ***Date:*** | 1/14/2020 |
| ***FLRPM:*** | 2960 | ***Load Inertia:*** | N/A | ***File:*** | GH2030 (30kW) |

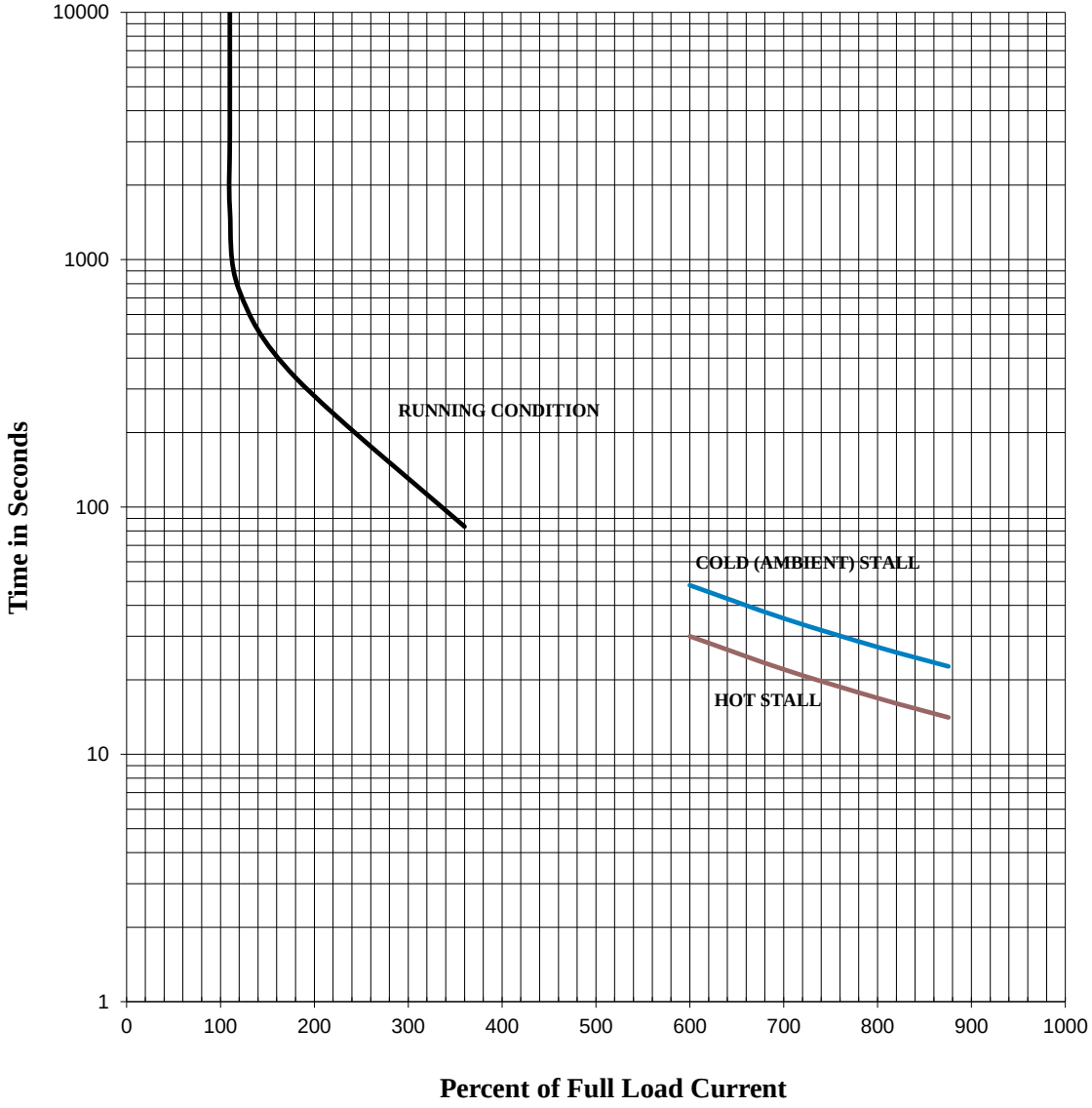


***Comments:*** PROJECT -

***D.E.Curve #:*** GH2030 (30kW)

***Prepared by:*** Zichao Xie

***Checked by:***

# TOSHIBA INTERNATIONAL CORPORATION
## Industrial Division / Houston Motor Plant

| | |
|---|---|
| INDEX | MPCF-1033 |
| SHEET NO. | 1 of 1 |
| ISSUED | 7/31/13 |
| SUPERSEDES | 11/8/96 |
| REVISION | 2 |
| WRITTEN BY | MDC |
| APPROVED BY | PAA |

## SQUIRREL CAGE INDUCTION MOTOR PERFORMANCE SPECIFICATIONS

CUSTOMER: -
TIC SR No.: -

### MOTOR NAMEPLATE DATA

| | | | | | | | |
|---|---|---|---|---|---|---|---|
| H.P.: | - | VOLTS: | 415 | 3 PH / | 50 Hz | S. RPM: | 3000 |
| FRAME: | 200L | ENCL: | TEFC | FLAMPS: | 52 | FLRPM: | 2965 |
| FORM: | FCKL1 | S.F.: | - | IEC DESIGN | NE | INSUL CLASS: | F |
| TYPE: | TKKH | AMB.: | 40°C | CODE: | - | DUTY: | Cont. |
| MODEL No.: | 0302SDMW7JS-P | | | kW: | 30 | | |
| NOM. EFF.: | 93.3 | MIN. EFF.: | - | cosØ | 0.84 | | |

| **AMPERAGE** | | **TORQUES** | | ****BEARINGS:** | |
|---|---|---|---|---|---|
| LOCKED ROTOR: | 483 | FULL LOAD (lb-ft.): | 71 | DRIVE END: | REFER TO NP |
| | | LOCKED ROTOR (%): | 325 | OPPOSITE DRIVE END: | REFER TO NP |
| | | BREAK DOWN (%): | 385 | | |

| **EFFICIENCY** | | **POWER FACTOR** | |
|---|---|---|---|
| FULL LOAD: | 94.7 | FULL LOAD: | 84.8 |
| 3/4 LOAD: | 93.7 | 3/4 LOAD: | 80.9 |
| 1/2 LOAD: | 91.3 | 1/2 LOAD: | 72.1 |

ALL CHARACTERISTICS ARE AVERAGE EXPECTED VALUES BASED UPON RATED VOLTAGE, FREQUENCY AND SINEWAVE POWER INPUT.

THE DECLARED LOCKED ROTOR CURRENT HAS A TOLERANCE OF 20%.

* TEMPERATURE RISE WILL BE CONSISTENT WITH INSULATION, AMBIENT AND SERVICE FACTOR AS DEFINED BY NEMA-MG-12 OR -20.

** BEARINGS ARE THE ONLY RECOMMENDED SPARE PART(S).

**CERTIFIED BY:** Zichao Xie

**DATE:** 1/14/2020

# TOSHIBA INTERNATIONAL CORPORATION

## Speed Torque/Current Curve

| | | | | | |
|---|---|---|---|---|---|
| ***Model #:*** | 0302SDMW7JS-P | | | ***FLAmps:*** | 52 |
| ***Enclosure:*** | TEFC | ***Voltage:*** | 415 V | ***Frame:*** | 200L |
| ***Pole:*** | 2 | ***Frequency:*** | 3 PH / 50 Hz | ***Ins. Class:*** | F |
| ***KW:*** | 30 | ***Rotor Inertia:*** | 6.6 lb-ft² | ***Date:*** | 1/14/2020 |
| ***FLRPM:*** | 2965 | ***Load Inertia:*** | N/A | ***File:*** | GH2030 (30kW) |

| | | | |
|---|---|---|---|
| ***Locked Rotor Amps:*** | 483 A | ***Load Type:*** | N/A |
| ***Locked Rotor Torque:*** | 325% | ***Starting at:*** | N/A |
| ***Breakdown Torque:*** | 385% | ***Accel. Time:*** | N/A |
| ***Rated Torque:*** | 71 lb-ft | | |

***Design Values***

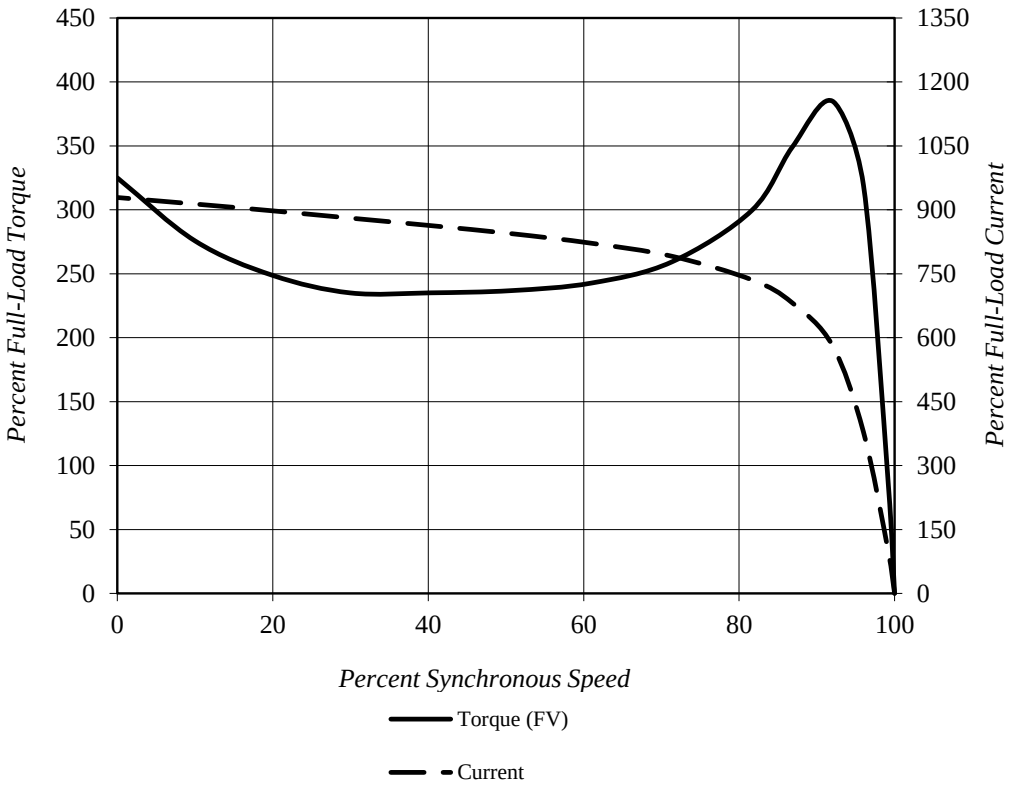


***Comments:*** PROJECT - ***D.E.Curve #:*** GH2030 (30kW)

| | |
|---|---|
| ***Prepared by:*** Zichao Xie | ***Checked by:*** |

# TOSHIBA INTERNATIONAL CORPORATION

## Thermal Limit & Acceleration Curves

***Design Values (For Reference Only)***

| | | | | | |
|---|---|---|---|---|---|
| ***Model #:*** | 0302SDMW7JS-P | | | ***FLAmps:*** | 52 |
| ***Enclosure:*** | TEFC | ***Voltage:*** | 415 V | ***Frame:*** | 200L |
| ***Pole:*** | 2 | ***Frequency:*** | 3 PH / 50 Hz | ***Ins. Class:*** | F |
| ***KW:*** | 30 | ***Rotor Inertia:*** | 6.6 lb-ft² | ***Date:*** | 1/14/2020 |
| ***FLRPM:*** | 2965 | ***Load Inertia:*** | N/A | ***File:*** | GH2030 (30kW) |

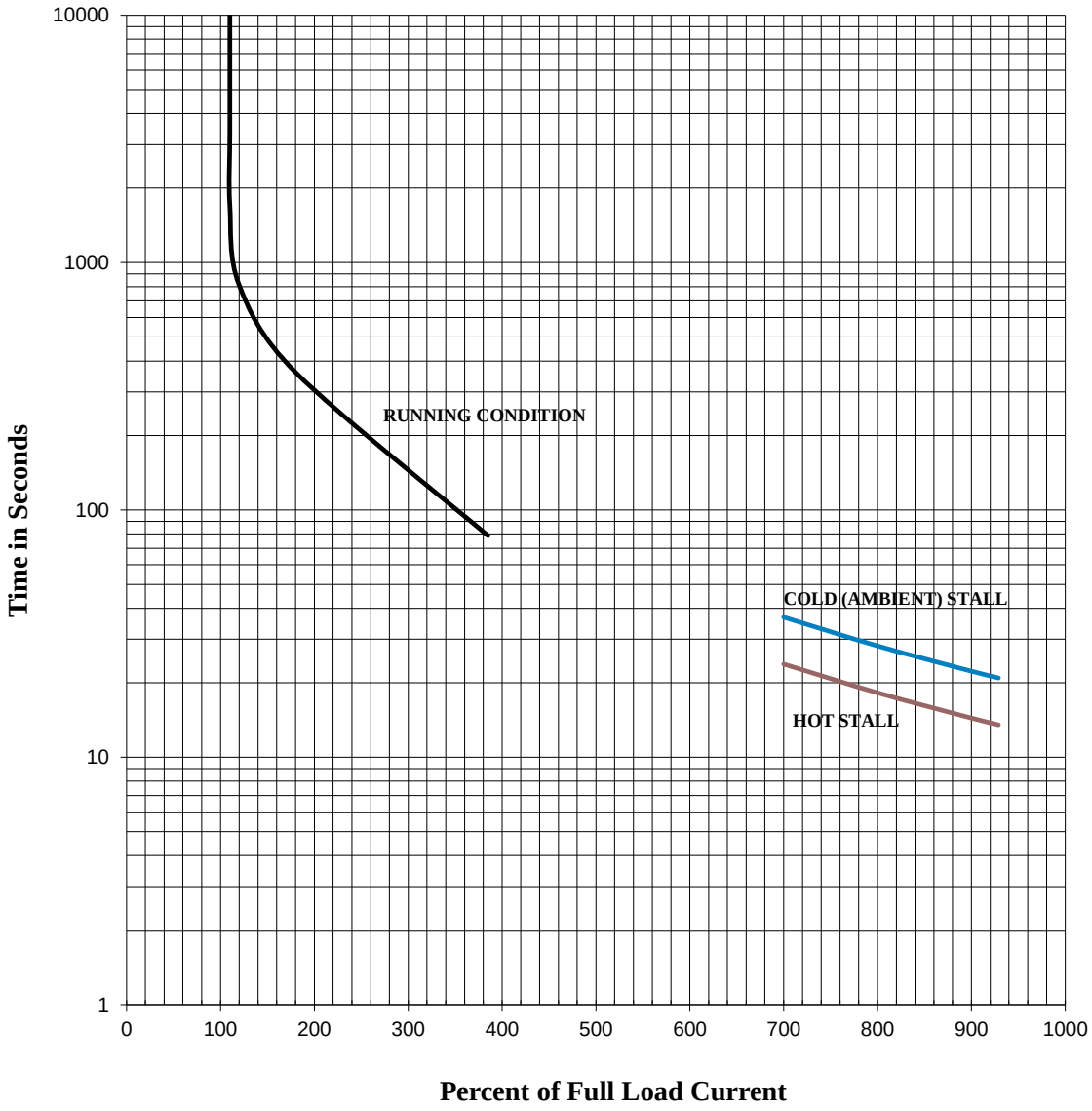


***Comments:*** PROJECT - ***D.E.Curve #:*** GH2030 (30kW)

| | |
|---|---|
| ***Prepared by:*** Zichao Xie | ***Checked by:*** |

| TOSHIBA INTERNATIONAL CORPORATION<br>Industrial Division / Houston Motor Plant | INDEX | MPCF-1033 |
|---|---|---|
| | SHEET NO. | 1 of 1 |
| | ISSUED | 7/31/13 |
| | SUPERSEDES | 11/8/96 |
| | REVISION | 2 |
| SQUIRREL CAGE INDUCTION MOTOR<br>PERFORMANCE SPECIFICATIONS | WRITTEN BY | MDC |
| | APPROVED BY | PAA |

CUSTOMER: -
TIC SR No.: -

## MOTOR NAMEPLATE DATA

| | | | | | | | |
|---|---|---|---|---|---|---|---|
| H.P.: | - | VOLTS: | 380 | 3 PH / | 50 Hz | S. RPM: | 3000 |
| FRAME: | 200L | ENCL: | TEFC | FLAMPS: | 55 | FLRPM: | 2960 |
| FORM: | FCKL1 | S.F.: | - | IEC DESIGN | NE | INSUL CLASS: | F |
| TYPE: | TKKH | AMB.: | 40°C | CODE: | - | DUTY: | Cont. |
| MODEL No.: | 0302SDMW7JS-P | | | kW: | 30 | | |
| NOM. EFF.: | 93.3 | MIN. EFF.: | - | cosØ | 0.87 | | |

| **AMPERAGE** | | **TORQUES** | | ****BEARINGS:** | |
|---|---|---|---|---|---|
| LOCKED ROTOR: | 439 | FULL LOAD (lb-ft.): | 71 | DRIVE END: | REFER TO NP |
| | | LOCKED ROTOR (%): | 265 | OPPOSITE DRIVE END: | REFER TO NP |
| | | BREAK DOWN (%): | 325 | | |

| **EFFICIENCY** | | **POWER FACTOR** | |
|---|---|---|---|
| FULL LOAD: | 94.3 | FULL LOAD: | 87.9 |
| 3/4 LOAD: | 93.6 | 3/4 LOAD: | 85.8 |
| 1/2 LOAD: | 91.6 | 1/2 LOAD: | 80.0 |

ALL CHARACTERISTICS ARE AVERAGE EXPECTED VALUES BASED UPON RATED VOLTAGE, FREQUENCY AND SINEWAVE POWER INPUT.

THE DECLARED LOCKED ROTOR CURRENT HAS A TOLERANCE OF 20%.

* TEMPERATURE RISE WILL BE CONSISTENT WITH INSULATION, AMBIENT AND SERVICE FACTOR AS DEFINED BY NEMA-MG-12 OR -20.

** BEARINGS ARE THE ONLY RECOMMENDED SPARE PART(S).

**CERTIFIED BY:** Zichao Xie

**DATE:** 1/14/2020

# TOSHIBA INTERNATIONAL CORPORATION

## Speed Torque/Current Curve

| | | | | | |
|---|---|---|---|---|---|
| ***Model #:*** | 0302SDMW7JS-P | | | ***FLAmps:*** | 55 |
| ***Enclosure:*** | TEFC | ***Voltage:*** | 380 V | ***Frame:*** | 200L |
| ***Pole:*** | 2 | ***Frequency:*** | 3 PH / 50 Hz | ***Ins. Class:*** | F |
| ***KW:*** | 30 | ***Rotor Inertia:*** | 6.6 lb-ft² | ***Date:*** | 1/14/2020 |
| ***FLRPM:*** | 2960 | ***Load Inertia:*** | N/A | ***File:*** | GH2030 (30kW) |

| | | | |
|---|---|---|---|
| ***Locked Rotor Amps:*** | 439 A | ***Load Type:*** | N/A |
| ***Locked Rotor Torque:*** | 265% | ***Starting at:*** | N/A |
| ***Breakdown Torque:*** | 325% | ***Accel. Time:*** | N/A |
| ***Rated Torque:*** | 71 lb-ft | | |

***Design Values***

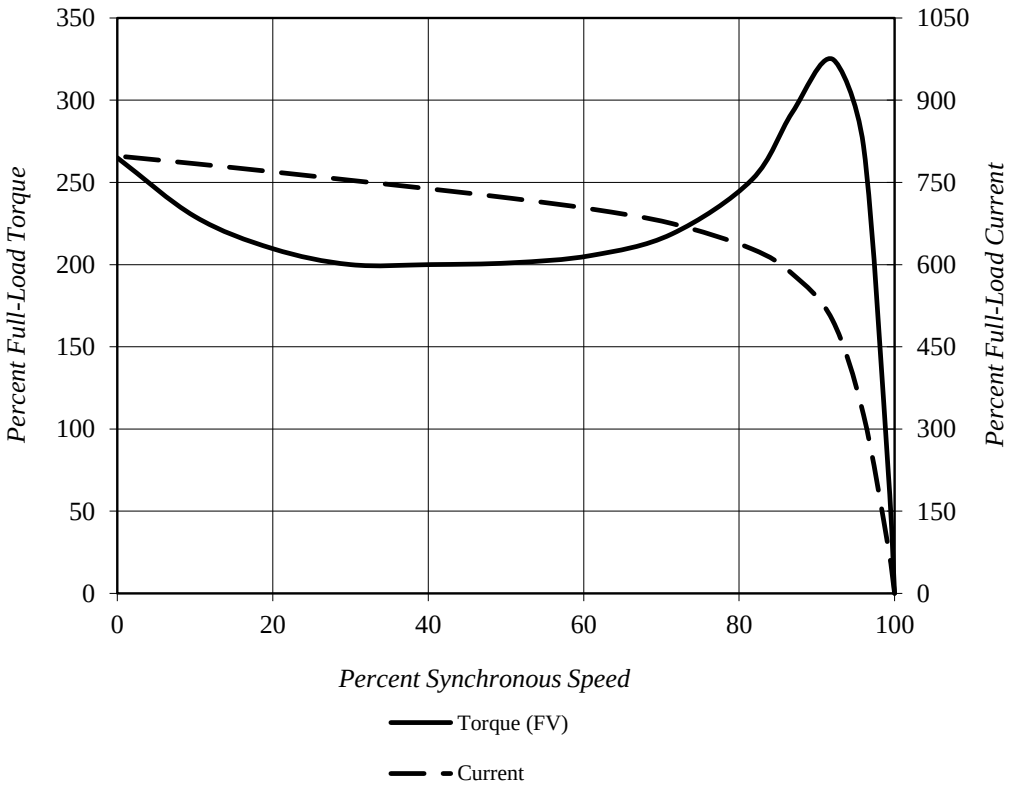


***Comments:*** PROJECT - ***D.E.Curve #:*** GH2030 (30kW)

| | |
|---|---|
| ***Prepared by:*** Zichao Xie | ***Checked by:*** |

# TOSHIBA INTERNATIONAL CORPORATION

## Thermal Limit & Acceleration Curves

***Design Values (For Reference Only)***

| | | | | | |
|---|---|---|---|---|---|
| ***Model #:*** | 0302SDMW7JS-P | | | ***FLAmps:*** | 55 |
| ***Enclosure:*** | TEFC | ***Voltage:*** | 380 V | ***Frame:*** | 200L |
| ***Pole:*** | 2 | ***Frequency:*** | 3 PH / 50 Hz | ***Ins. Class:*** | F |
| ***KW:*** | 30 | ***Rotor Inertia:*** | 6.6 lb-ft² | ***Date:*** | 1/14/2020 |
| ***FLRPM:*** | 2960 | ***Load Inertia:*** | N/A | ***File:*** | GH2030 (30kW) |

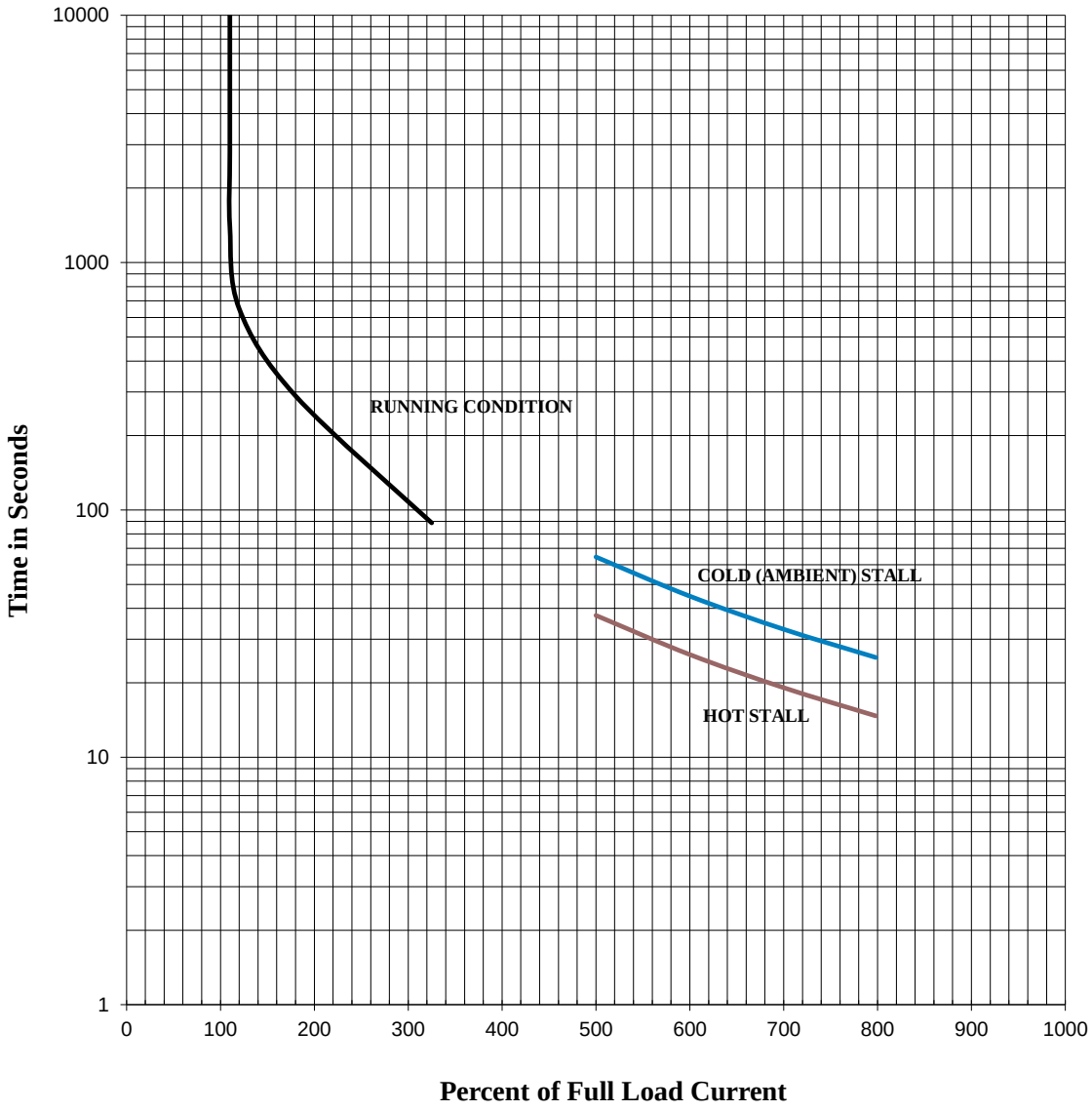


***Comments:*** PROJECT - ***D.E.Curve #:*** GH2030 (30kW)

| | |
|---|---|
| ***Prepared by:*** Zichao Xie | ***Checked by:*** |

| TOSHIBA INTERNATIONAL CORPORATION<br>Industrial Division / Houston Motor Plant | INDEX | MPCF-1033 |
|---|---|---|
| | SHEET NO. | 1 of 1 |
| | ISSUED | 7/31/13 |
| | SUPERSEDES | 11/8/96 |
| | REVISION | 2 |
| SQUIRREL CAGE INDUCTION MOTOR<br>PERFORMANCE SPECIFICATIONS | WRITTEN BY | MDC |
| | APPROVED BY | PAA |

CUSTOMER: -
TIC SR No.: -

## MOTOR NAMEPLATE DATA

| | | | | | | | |
|---|---|---|---|---|---|---|---|
| H.P.: | 40 | VOLTS: | 460 | 3 PH / | 60 Hz | S. RPM: | 3600 |
| FRAME: | 200L | ENCL: | TEFC | FLAMPS: | 46 | FLRPM: | 3565 |
| FORM: | FCKL1 | S.F.: | 1.15 | NEMA DESIGN: | A | INSUL CLASS: | F |
| TYPE: | TKKH | AMB.: | 40°C | CODE: | K | DUTY: | Cont. |
| MODEL No.: | 0302SDMW7JS-P | | | kW: | 30 | | |
| NOM. EFF.: | 92.4 | MIN. EFF.: | - | P.F.: | 86.0 | | |

| **AMPERAGE** | | **TORQUES** | | ****BEARINGS:** | |
|---|---|---|---|---|---|
| LOCKED ROTOR: | 447 | FULL LOAD (lb-ft.): | 59 | DRIVE END: | REFER TO NP |
| | | LOCKED ROTOR (%): | 295 | OPPOSITE DRIVE END: | REFER TO NP |
| | | BREAK DOWN (%): | 385 | | |

| **EFFICIENCY** | | **POWER FACTOR** | |
|---|---|---|---|
| FULL LOAD: | 95.0 | FULL LOAD: | 86.3 |
| 3/4 LOAD: | 93.9 | 3/4 LOAD: | 83.0 |
| 1/2 LOAD: | 91.3 | 1/2 LOAD: | 75.3 |

ALL CHARACTERISTICS ARE AVERAGE EXPECTED VALUES BASED UPON RATED VOLTAGE, FREQUENCY AND SINEWAVE POWER INPUT.

THE DECLARED LOCKED ROTOR CURRENT HAS A TOLERANCE OF 20%.

* TEMPERATURE RISE WILL BE CONSISTENT WITH INSULATION, AMBIENT AND SERVICE FACTOR AS DEFINED BY NEMA-MG-12 OR -20.

** BEARINGS ARE THE ONLY RECOMMENDED SPARE PART(S).

**CERTIFIED BY:** Zichao Xie

**DATE:** 1/14/2020

# TOSHIBA INTERNATIONAL CORPORATION

## Speed Torque/Current Curve

| | | | | | |
|---|---|---|---|---|---|
| ***Model #:*** | 0302SDMW7JS-P | | | ***FLAmps:*** | 46 |
| ***Enclosure:*** | TEFC | ***Voltage:*** | 460 V | ***Frame:*** | 200L |
| ***Pole:*** | 2 | ***Frequency:*** | 3 PH / 60 Hz | ***Ins. Class:*** | F |
| ***HP:*** | 40 | ***Rotor Inertia:*** | 6.6 lb-ft² | ***Date:*** | 1/14/2020 |
| ***FLRPM:*** | 3565 | ***Load Inertia:*** | N/A | ***File:*** | GH2030 (30kW) |

| | | | |
|---|---|---|---|
| ***Locked Rotor Amps:*** | 447 A | ***Load Type:*** | N/A |
| ***Locked Rotor Torque:*** | 295% | ***Starting at:*** | N/A |
| ***Breakdown Torque:*** | 385% | ***Accel. Time:*** | N/A |
| ***Rated Torque:*** | 59 lb-ft | | |

***Design Values***

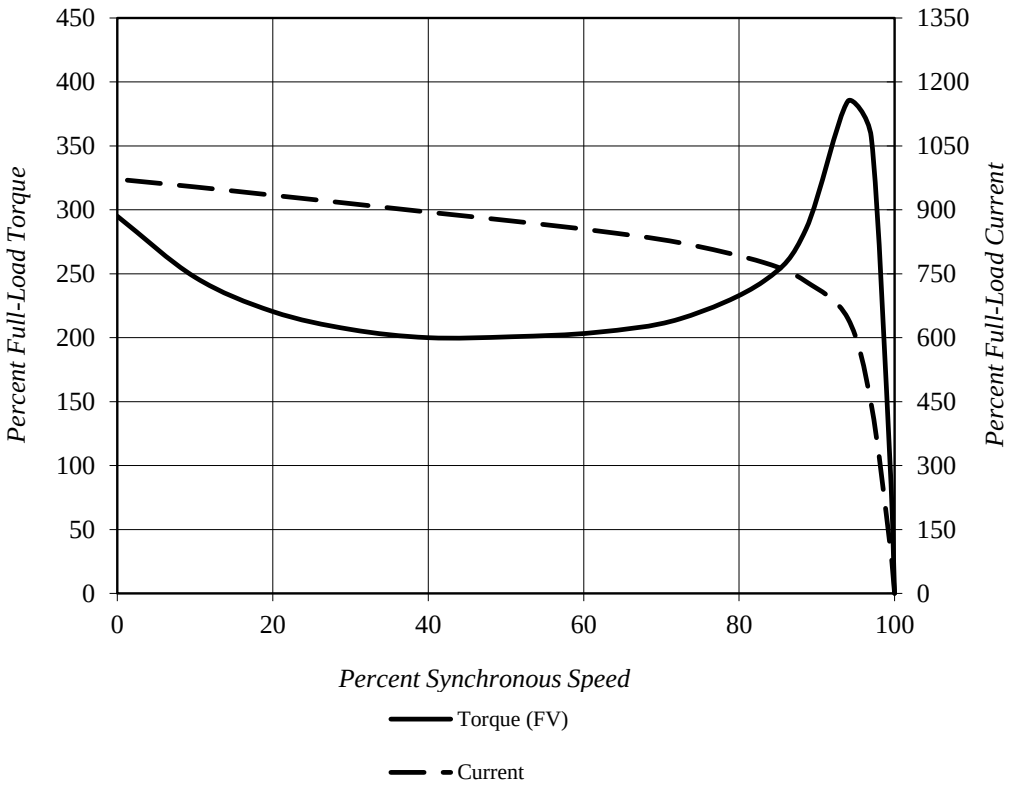


***Comments:*** PROJECT - ***D.E.Curve #:*** GH2030 (30kW)

| | |
|---|---|
| ***Prepared by:*** Zichao Xie | ***Checked by:*** |

# TOSHIBA INTERNATIONAL CORPORATION

## Thermal Limit & Acceleration Curves

***Design Values (For Reference Only)***

| | | | | | |
|---|---|---|---|---|---|
| ***Model #:*** | 0302SDMW7JS-P | | | ***FLAmps:*** | 46 |
| ***Enclosure:*** | TEFC | ***Voltage:*** | 460 V | ***Frame:*** | 200L |
| ***Pole:*** | 2 | ***Frequency:*** | 3 PH / 60 Hz | ***Ins. Class:*** | F |
| ***HP:*** | 40 | ***Rotor Inertia:*** | 6.6 lb-ft² | ***Date:*** | 1/14/2020 |
| ***FLRPM:*** | 3565 | ***Load Inertia:*** | N/A | ***File:*** | GH2030 (30kW) |

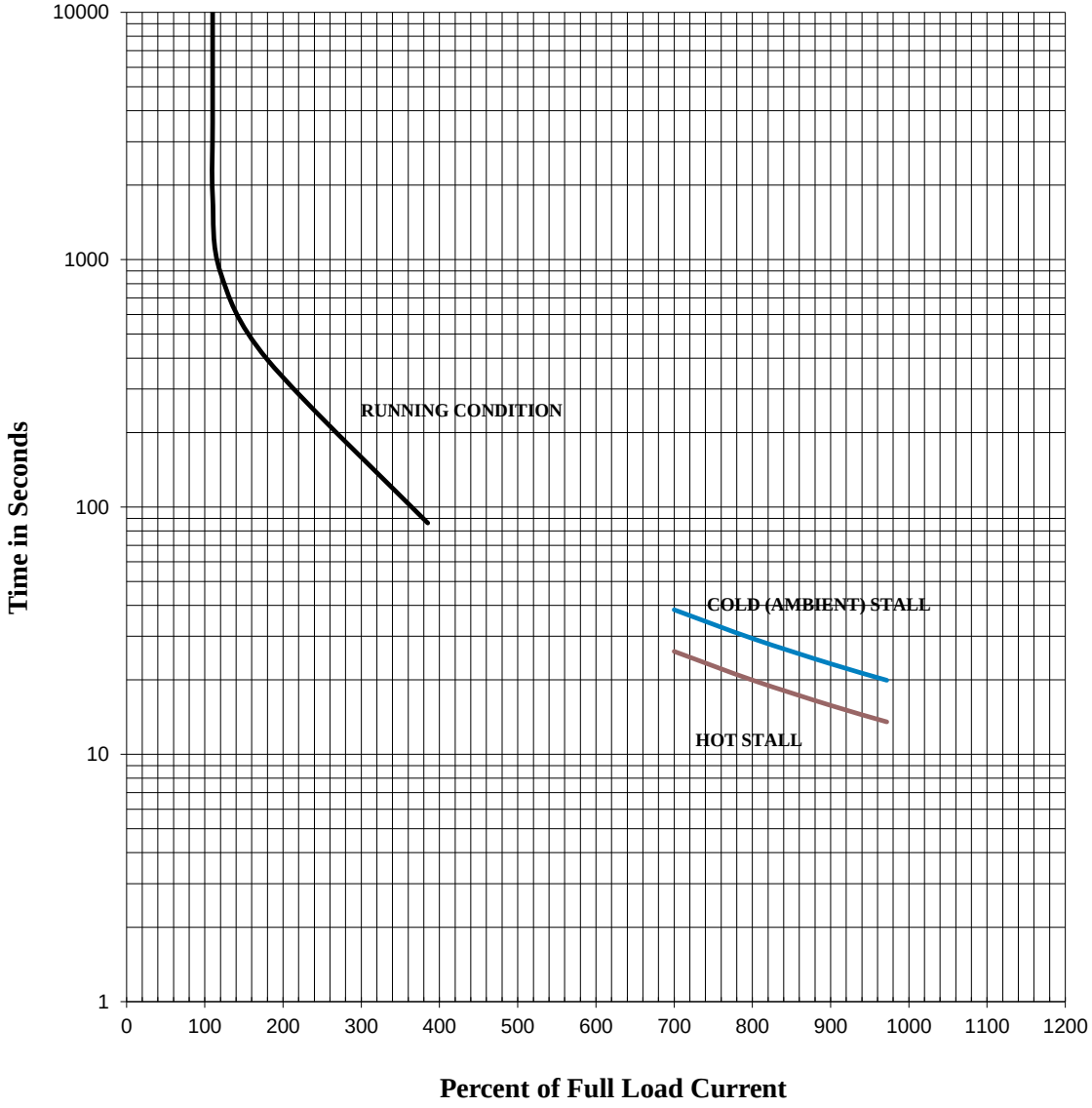


***Comments:*** PROJECT - ***D.E.Curve #:*** GH2030 (30kW)

| | |
|---|---|
| ***Prepared by:*** Zichao Xie | ***Checked by:*** |