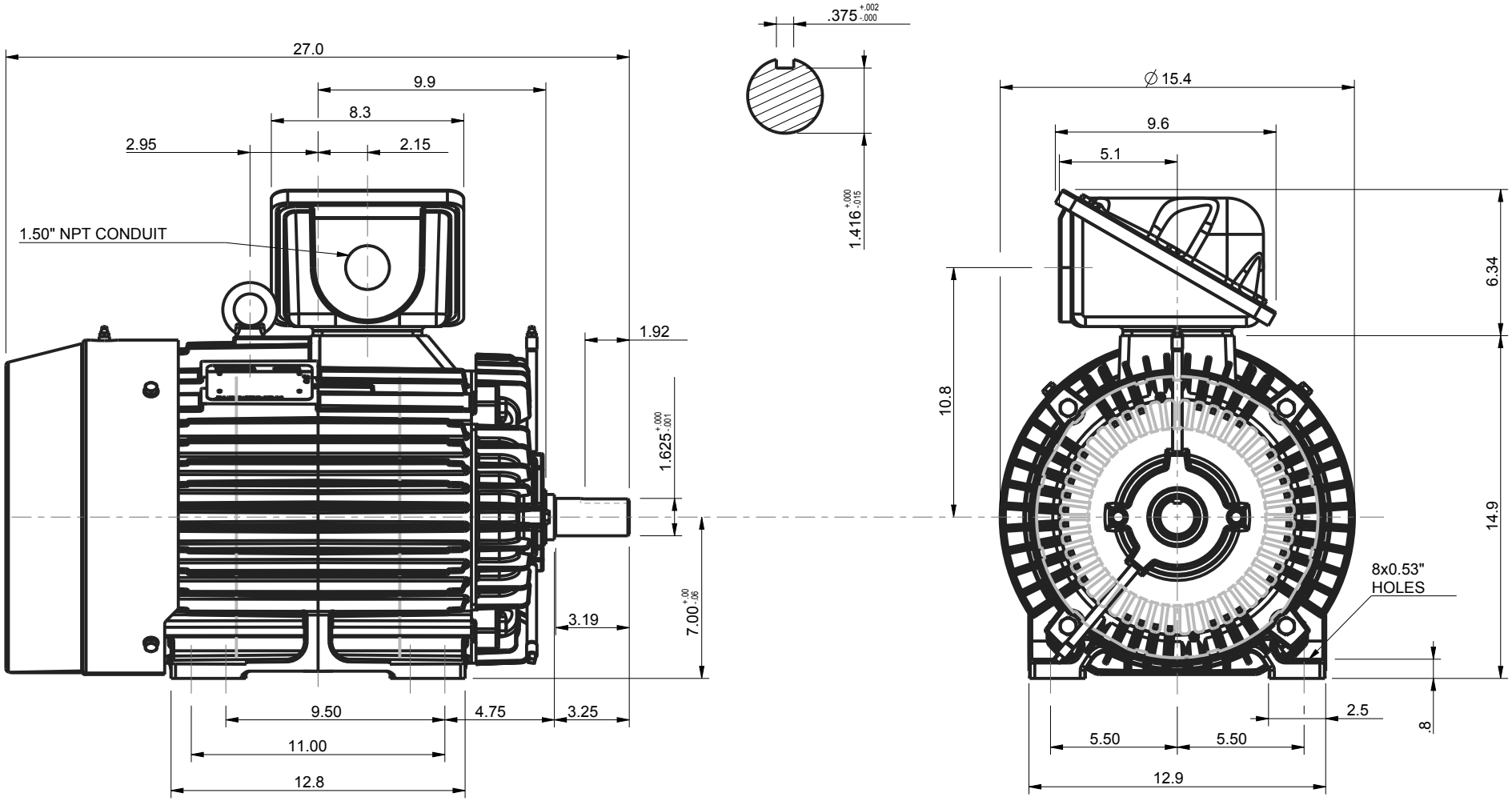

NOTES:
1. MAIN CONDUIT BOX MAY BE ROTATED IN 90° INCREMENTS
2. STANDARD PRODUCT USE BI-DIRECTIONAL FAN. OPPOSITE ROTATION AVAILABLE ONLY BY CONNECTION CHANGE.
3. KEY DIMENSIONS EQUAL 0.375" x 0.375" x 1.88" (MOTOR SUPPLIED WITH KEY)

UNITS: INCHES

TOSHIBA RESERVES THE RIGHT TO MAKE CHANGES OF TECHNICAL IMPROVEMENT WITHOUT NOTICE. DO NOT USE FOR CONSTRUCTION, INSTALLATION, OR APPLICATION PURPOSES UNLESS THE DRAWING IS CERTIFIED.

280TS TEFC FRAME
F3 ASSEMBLY

MDSLV020-05

TOLERANCES

.X	.1
.XX	.03
.XXX	.005
.XXXX	.0005

MAXIMUM MOTOR WEIGHT
448 lbs.
203 kgs.

NO	REVISION	DRAWN BY	DATE	CHECK
0	FIRST ISSUE (OVERRIDE 'U' & 'R' DIMS.)	M. O'DOWD	02/03/14	

EQPGlobal SD
XT SERIES

DRAWN BY: M. O'DOWD
CHECK BY: J. RUSSELL
APPROVED BY:

TOSHIBA
TOSHIBA INTERNATIONAL CORPORATION

www.toshiba.com/ind

Issued Date	9/24/2019	Transmit #	
Issued By	dschoeck	Issued Rev	

TOSHIBA

TYPICAL MOTOR PERFORMANCE DATA

Model: 0302SDSR41B-P3

HP	kW	Pole	FL RPM	Frame	Voltage	Hz	Phase	FL Amps
30	22	2	3540	286TS	230/460	60	3	70/35
Enclosure	**IP**	**Ins. Class**	**S.F.**	**Duty**	**NEMA Nom. Eff.**	**NEMA Design**	**kVA Code**	**Ambient (°C)**
TEFC	55	F	1.15	CONT	91.7	B	G	40 C

Load	HP	kW	Amperes	Efficiency (%)	Power Factor (%)
Full Load	30	22.4	35.0	91.9	88.9
¾ Load	22.50	16.8	27.1	91.0	86.5
½ Load	15.00	11.2	19.9	88.9	80.7
¼ Load	7.50	5.6	14.0	80.9	62.0
No Load			9.2		11.0
Locked Rotor			217		38.1

Torque				Rotor wk² Inertia
Full Load (lb-ft)	Locked Rotor (% FLT)	Pull Up (% FLT)	Break Down (% FLT)	(lb-ft²)
44.5	215	195	265	3.58

Safe Stall Time(s)		Sound Pressure dB(A) @ 1M	Bearings*		Approx. Motor Weight
Cold	Hot		DE	NDE	(lbs)
35	15	-	6310ZC3	6310ZC3	495

*Bearings are the only recommended spare part(s).

Motor Options:
Product Family:EQP Global SD
Mounting:Footed,Shaft:TS Shaft

Customer	
Customer PO	
Sales Order	
Project #	

Tag:

All characteristics are average expected values.

TOSHIBA INTERNATIONAL CORPORATION · HOUSTON, TEXAS U.S.A.

Engineering	aacosta	Doc. Written By	D. Suarez	Doc.# / Rev	MPCF-1119 / 1
Engr. Date	4/19/2012	Doc. Approved By	M. Campbell	Doc. Issued	9/20/2019

Issued Date	9/24/2019	Transmit #	
Issued By	dschoeck	Issued Rev	

TOSHIBA

SPEED TORQUE/CURRENT CURVE

Model: 0302SDSR41B-P3

HP	kW	Pole	FL RPM	Frame	Voltage	Hz	Phase	FL Amps
30	22	2	3540	286TS	230/460	60	3	70/35
Enclosure	**IP**	**Ins. Class**	**S.F.**	**Duty**	**NEMA Nom. Eff.**	**NEMA Design**	**kVA Code**	**Ambient (°C)**
TEFC	55	F	1.15	CONT	91.7	B	G	40 C

Locked Rotor Amps	Rotor wk² Inertia (lb-ft²)	Torque			
		Full Load (lb-ft)	Locked Rotor (%)	Pull Up (%)	Break Down (%)
217	3.58	44.5	215	195	265

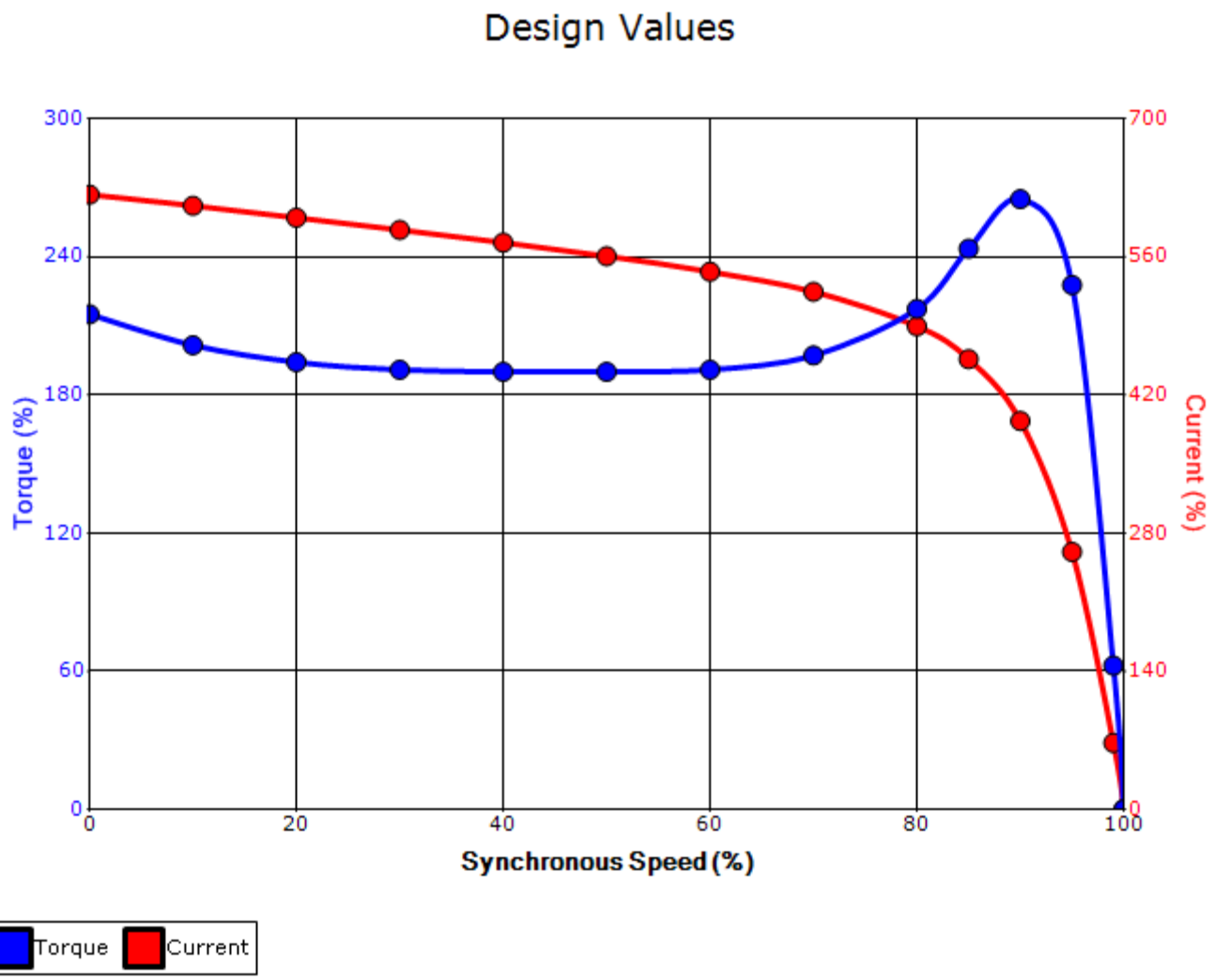

Customer			**wk² Load Inertia (lb-ft²)**	-
Customer PO			**Load Type**	-
Sales Order			**Voltage (%)**	100
Project #			**Accel. Time**	-

Tag:

All characteristics are average expected values.

TOSHIBA INTERNATIONAL CORPORATION · HOUSTON, TEXAS U.S.A.

Engineering	aacosta	**Doc. Written By**	D. Suarez	**Doc.# / Rev**	MPCF-1121/1
Engr. Date	4/19/2012	**Doc. Approved By**	M. Campbell	**Doc. Issued**	9/20/2019

Motor Connection Diagrams
12 Leads

Across-the-Line Starting / Running Connections

Low Voltage Delta

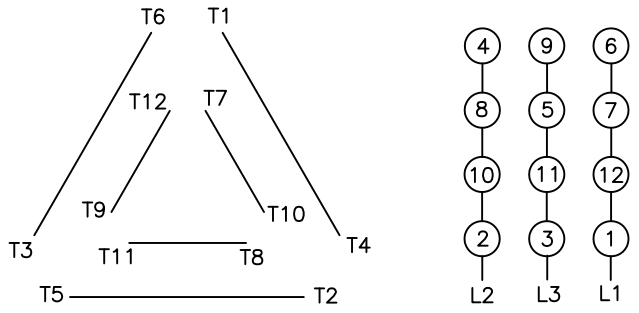

High Voltage Delta

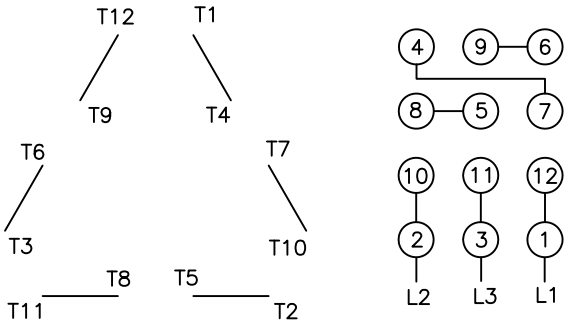

Switch L1 and L2 to reverse rotation

Suitable for Wye–Delta Starting and Limited Part–Winding–Starting.
Please Contact Toshiba International for specific connections.