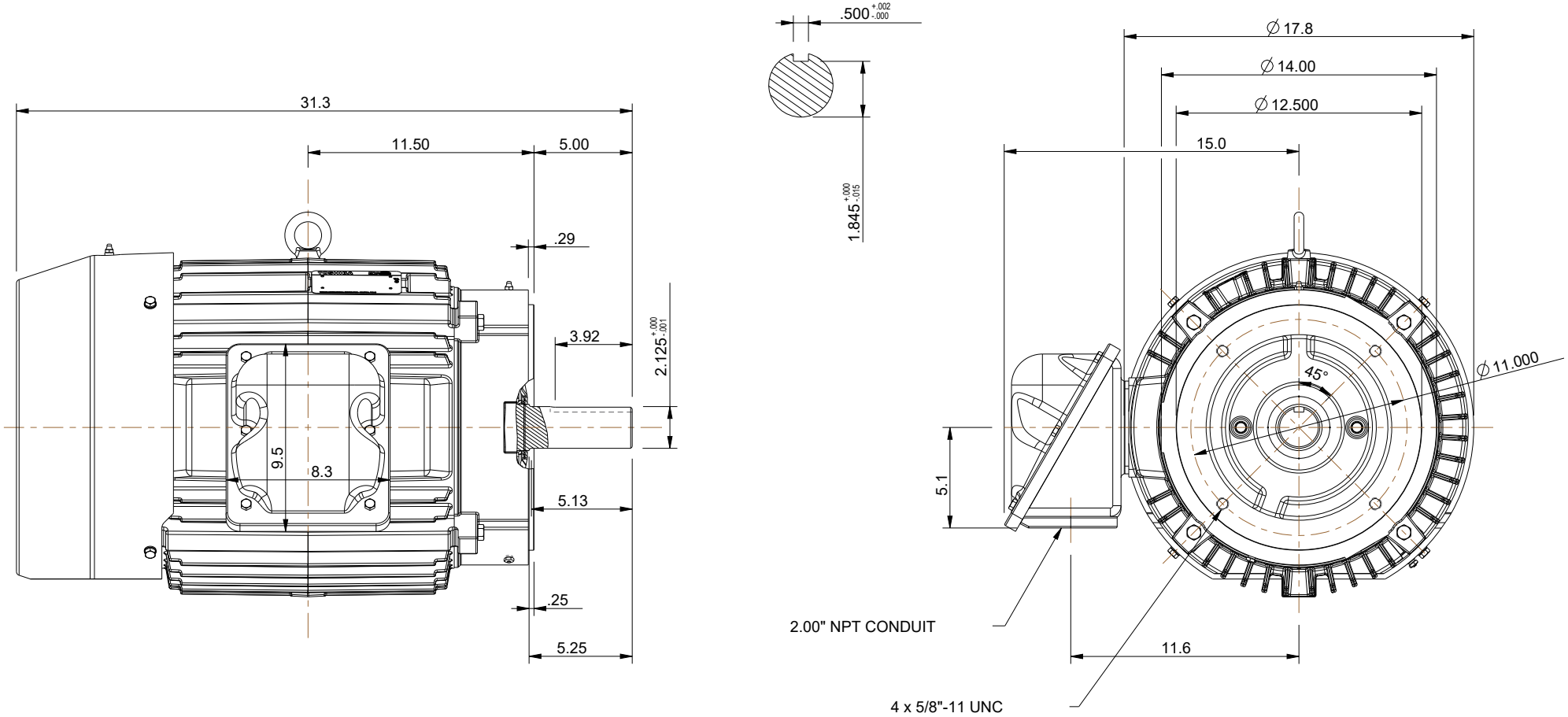


| | |
|---|---|
| UNITS: INCHES | NOTES: |
| ROTATION FROM NDE | 1. MAIN CONDUIT BOX MAY BE ROTATED IN 90° INCREMENTS |
| X CCW / CW | 2. STANDARD PRODUCT USES BI-DIRECTIONAL FAN. OPPOSITE ROTATION AVAILABLE ONLY BY CONNECTION CHANGE. |
| | 3. KEY DIMENSIONS EQUAL 0.500"x 0.500"x 3.88" (MOTOR SUPPLIED WITH KEY) |

TOSHIBA RESERVES THE RIGHT TO MAKE CHANGES OF TECHNICAL IMPROVEMENT AND THE DATA MAY CHANGE WITHOUT NOTICE — [ ] PRELIMINARY

DO NOT USE FOR CONSTRUCTION, INSTALLATION, OR APPLICATION PURPOSES UNLESS THE DRAWING IS MARKED AS CERTIFIED — [X] CERTIFIED

**TOSHIBA** MILL & CHEMICAL DUTY EQPGlobal 840

www.toshiba.com/tic

**TOSHIBA INTERNATIONAL CORPORATION**

TOTALLY ENCLOSED FAN COOLED
ROUND BODY C-FACED
3 PHASE INDUCTION MOTOR
324TC-326TC F1 ASSEMBLY

DRAWING #: MDSLV245-06

REV. DATE: 07/10/18 REV. #: 2 PER.: M. O'DOWD

REV. DESCRIP.:

| Issued Date | 7/19/2021 | Transmit # | |
|---|---|---|---|
| Issued By | dschoeck | Issued Rev | |

TOSHIBA
Leading Innovation >>>

# TYPICAL MOTOR PERFORMANCE DATA

**Model:** 0404XSSB44A-P

| HP | kW | Pole | FL RPM | Frame | Voltage | Hz | Phase | FL Amps |
|---|---|---|---|---|---|---|---|---|
| 40 | 30 | 4 | 1775 | 324TC | 460 | 60 | 3 | 47 |
| **Enclosure** | **IP** | **Ins. Class** | **S.F.** | **Duty** | **NEMA Nom. Eff.** | **NEMA Design** | **kVA Code** | **Ambient (°C)** |
| TEFC | 55 | F | 1.15 | CONT | 94.1 | B | | 40 C |

| Load | HP | kW | Amperes | Efficiency (%) | Power Factor (%) |
|---|---|---|---|---|---|
| Full Load | 40.00 | 29.8 | 47 | 93.5 | 84.5 |
| ¾ Load | 30.00 | 22.4 | 37 | 92.9 | 81.2 |
| ½ Load | 20.00 | 14.9 | 28 | 91.0 | 73.0 |
| ¼ Load | 10.00 | 7.5 | 21 | 84.9 | 52.0 |
| No Load | | | 15.9 | | 5.9 |
| Locked Rotor | | | 290 | | 28.6 |

| Torque | | | | Rotor wk² Inertia |
|---|---|---|---|---|
| Full Load (lb-ft) | Locked Rotor (% FLT) | Pull Up (% FLT) | Break Down (% FLT) | (lb-ft²) |
| 118 | 180 | 155 | 275 | 9.80 |

| Safe Stall Time(s) | | Sound Pressure dB(A) @ 1M | Bearings* | | Approx. Motor Weight |
|---|---|---|---|---|---|
| Cold | Hot | | DE | NDE | (lbs) |
| 28 | 16 | - | 6312C3 | 6312C3 | 723 |

*Bearings are the only recommended spare part(s).

**Motor Options:**
Product Family:EQP Global 840
Mounting:C-Face Round,Shaft:T Shaft

| | |
|---|---|
| **Customer** | |
| **Customer PO** | |
| **Sales Order** | |
| **Project #** | |

**Tag:**

All characteristics are average expected values.

**TOSHIBA INTERNATIONAL CORPORATION · HOUSTON, TEXAS U.S.A.**

| | | | | | |
|---|---|---|---|---|---|
| **Engineering** | bmammen | **Doc. Written By** | D. Suarez | **Doc.# / Rev** | MPCF-1119 / 0 |
| **Engr. Date** | 3/1/2017 | **Doc. Approved By** | M. Campbell | **Doc. Issued** | 6/8/2011 |

| | | | |
|---|---|---|---|
| Issued Date | 7/19/2021 | Transmit # | |
| Issued By | dschoeck | Issued Rev | |

TOSHIBA
Leading Innovation >>>

# SPEED TORQUE/CURRENT CURVE

**Model:** 0404XSSB44A-P

| HP | kW | Pole | FL RPM | Frame | Voltage | Hz | Phase | FL Amps |
|---|---|---|---|---|---|---|---|---|
| 40 | 30 | 4 | 1775 | 324TC | 460 | 60 | 3 | 47 |
| **Enclosure** | **IP** | **Ins. Class** | **S.F.** | **Duty** | **NEMA Nom. Eff.** | **NEMA Design** | **kVA Code** | **Ambient (°C)** |
| TEFC | 55 | F | 1.15 | CONT | 94.1 | B | | 40 C |

| Locked Rotor Amps | Rotor wk² Inertia (lb-ft²) | Torque | | | |
|---|---|---|---|---|---|
| | | Full Load (lb-ft) | Locked Rotor (%) | Pull Up (%) | Break Down (%) |
| 290 | 9.80 | 118 | 180 | 155 | 275 |

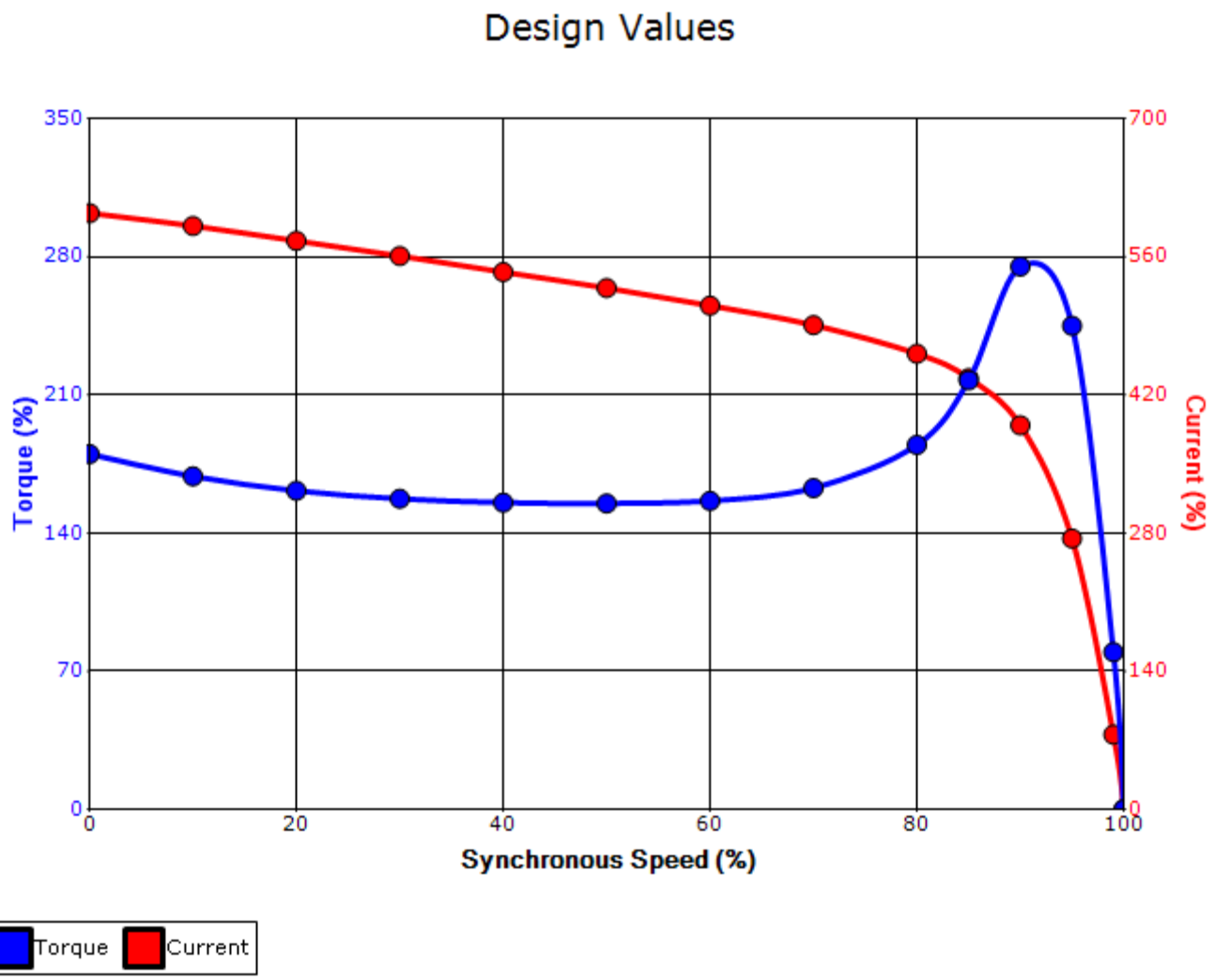


| | | | | |
|---|---|---|---|---|
| **Customer** | | | **wk² Load Inertia (lb-ft²)** | - |
| **Customer PO** | | | **Load Type** | - |
| **Sales Order** | | | **Voltage (%)** | 100 |
| **Project #** | | | **Accel. Time** | - |

**Tag:**

All characteristics are average expected values.

**TOSHIBA INTERNATIONAL CORPORATION · HOUSTON, TEXAS U.S.A.**

| | | | | | |
|---|---|---|---|---|---|
| **Engineering** | bmammen | **Doc. Written By** | D. Suarez | **Doc.# / Rev** | MPCF-1121 / 0 |
| **Engr. Date** | 3/1/2017 | **Doc. Approved By** | M. Campbell | **Doc. Issued** | 6/8/2011 |

# Motor Connection Diagram
## 3 Leads - Delta Connection

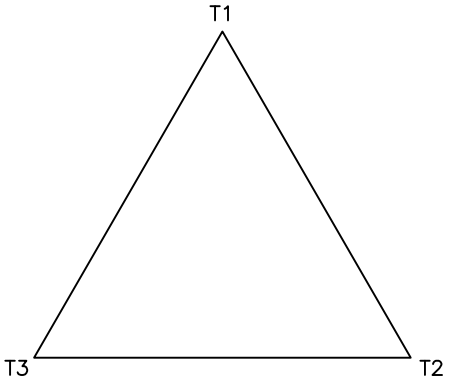


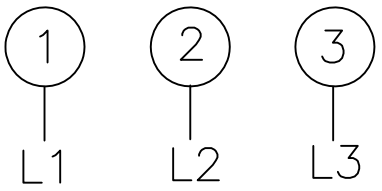


Switch L1 and L2 to reverse rotation

Each lead may consist of more than one cable.
If multiple cables represent a single lead, each one of them will be labeled with the appropriate lead number.