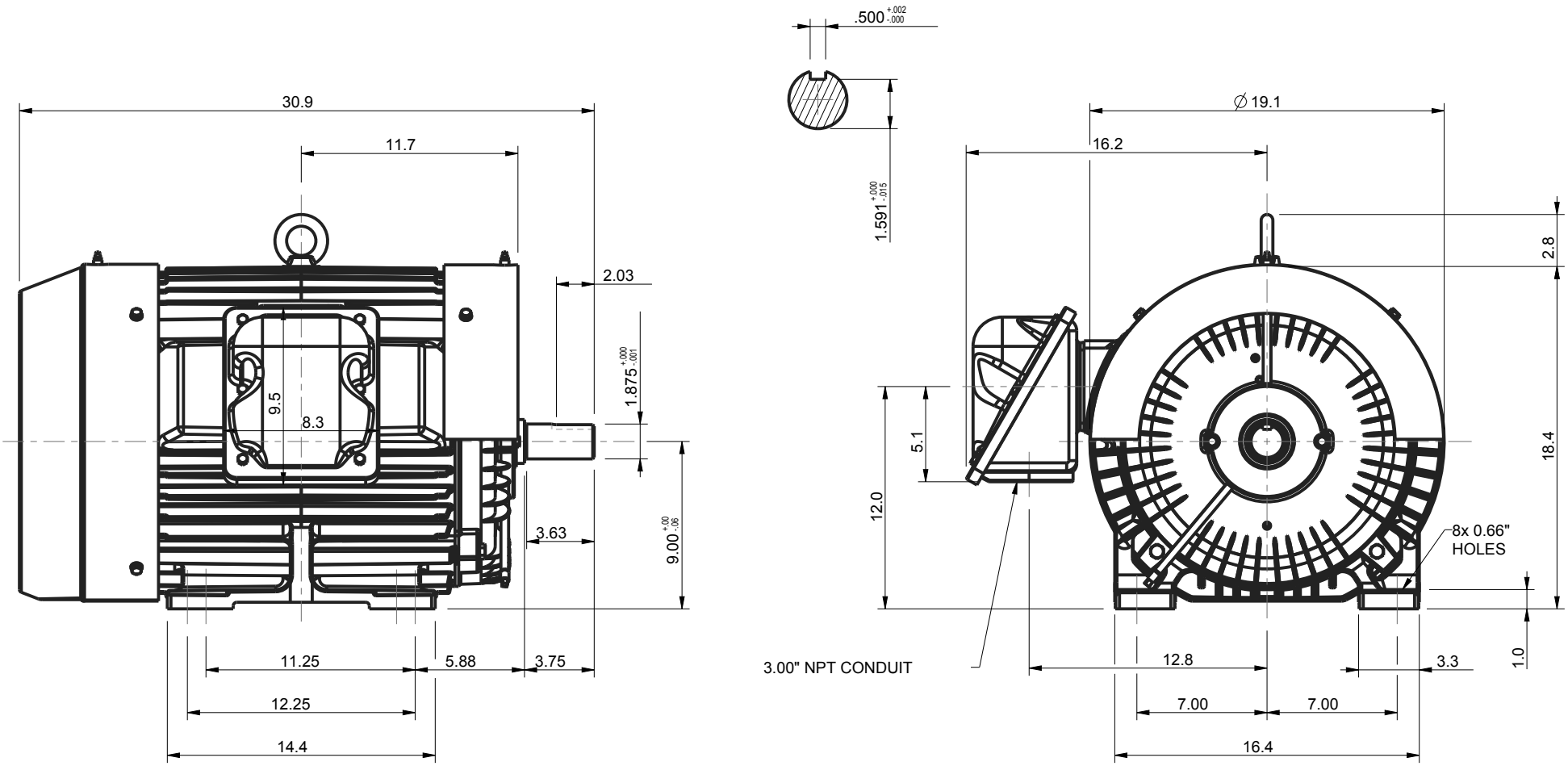

UNITS: INCHES

ROTATION FROM NDE

X CCW CW

NOTES:

1. MAIN CONDUIT BOX MAY BE ROTATED IN 90° INCREMENTS
2. STANDARD PRODUCT USES BI-DIRECTIONAL FAN. OPPOSITE ROTATION AVAILABLE ONLY BY CONNECTION CHANGE.
3. KEY DIMENSIONS EQUAL 0.500"x 0.500"x 2.00" (MOTOR SUPPLIED WITH KEY)

TOSHIBA RESERVES THE RIGHT TO MAKE CHANGES OF TECHNICAL IMPROVEMENT AND THE DATA MAY CHANGE WITHOUT NOTICE

DO NOT USE FOR CONSTRUCTION, INSTALLATION, OR APPLICATION PURPOSES UNLESS THE DRAWING IS MARKED AS CERTIFIED

☐ PRELIMINARY

X CERTIFIED

TOSHIBA

www.toshiba.com/tic

TOSHIBA INTERNATIONAL CORPORATION

SEVERE DUTY EQPlus SD

TOTALLY ENCLOSED FAN COOLED
HORIZONTAL FOOT MOUNTED
3 PHASE INDUCTION MOTOR
364TS-365TS F1 ASSEMBLY

DRAWING #: MDSLV002-07

REV. DATE: 07/11/18 REV. #: 2 PER.: M. O'DOWD

REV. DESCRIP.:

Issued Date	9/24/2019	Transmit #	
Issued By	dschoeck	Issued Rev	

TOSHIBA

TYPICAL MOTOR PERFORMANCE DATA

Model: 0752SDSC41B-P

HP	kW	Pole	FL RPM	Frame	Voltage	Hz	Phase	FL Amps
75	55	2	3550	365TS	575	60	3	69
Enclosure	**IP**	**Ins. Class**	**S.F.**	**Duty**	**NEMA Nom. Eff.**	**NEMA Design**	**kVA Code**	**Ambient (°C)**
TEFC	55	F	1.15	CONT	93.6	B	G	40 C

Load	HP	kW	Amperes	Efficiency (%)	Power Factor (%)
Full Load	75	55.9	69.0	93.8	89.9
¾ Load	56.25	41.9	50.4	93.3	88.7
½ Load	37.50	28.0	35.3	91.7	84.8
¼ Load	18.75	14.0	21.7	86.9	74.3
No Load			14.8		7.9
Locked Rotor			433		34.5

Torque				Rotor wk² Inertia
Full Load (lb-ft)	Locked Rotor (% FLT)	Pull Up (% FLT)	Break Down (% FLT)	(lb-ft²)
111	195	175	250	12.57

Safe Stall Time(s)		Sound Pressure dB(A) @ 1M	Bearings*		Approx. Motor Weight
Cold	Hot		DE	NDE	(lbs)
35	15	-	6312ZC3	6312ZC3	895

*Bearings are the only recommended spare part(s).

Motor Options:
Product Family:EQP Global SD
Mounting:Footed,Shaft:TS Shaft

Customer	
Customer PO	
Sales Order	
Project #	

Tag:

All characteristics are average expected values.

TOSHIBA INTERNATIONAL CORPORATION · HOUSTON, TEXAS U.S.A.

Engineering	garce	**Doc. Written By**	D. Suarez	**Doc.# / Rev**	MPCF-1119 / 1
Engr. Date	8/21/2015	**Doc. Approved By**	M. Campbell	**Doc. Issued**	9/20/2019

Issued Date	9/24/2019	Transmit #	
Issued By	dschoeck	Issued Rev	

TOSHIBA

SPEED TORQUE/CURRENT CURVE

Model: 0752SDSC41B-P

HP	kW	Pole	FL RPM	Frame	Voltage	Hz	Phase	FL Amps
75	55	2	3550	365TS	575	60	3	69
Enclosure	**IP**	**Ins. Class**	**S.F.**	**Duty**	**NEMA Nom. Eff.**	**NEMA Design**	**kVA Code**	**Ambient (°C)**
TEFC	55	F	1.15	CONT	93.6	B	G	40 C

Locked Rotor Amps	Rotor wk² Inertia (lb-ft²)	Torque			
		Full Load (lb-ft)	Locked Rotor (%)	Pull Up (%)	Break Down (%)
433	12.57	111	195	175	250

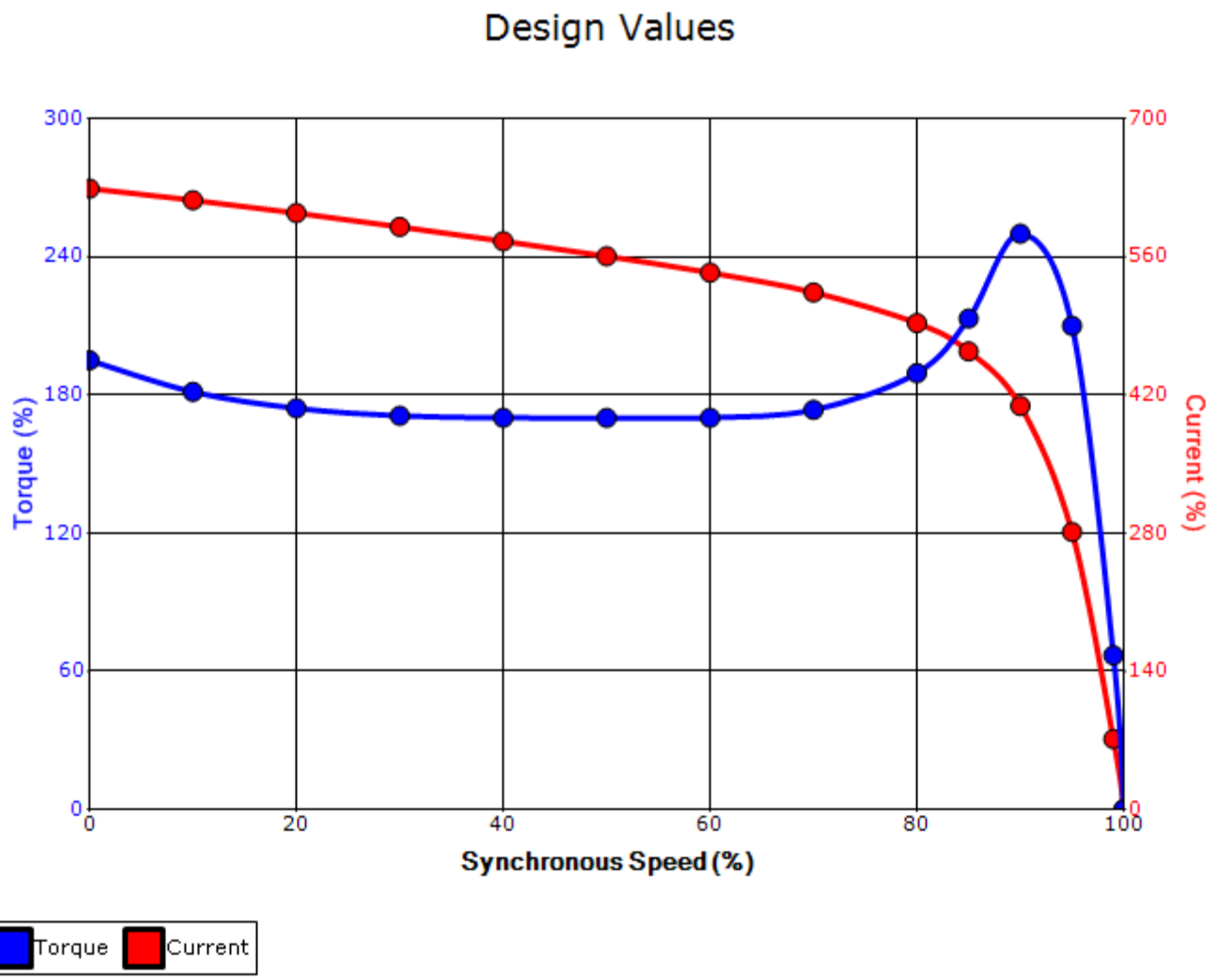

Customer			**wk² Load Inertia (lb-ft²)**	-
Customer PO			**Load Type**	-
Sales Order			**Voltage (%)**	100
Project #			**Accel. Time**	-

Tag:

All characteristics are average expected values.

TOSHIBA INTERNATIONAL CORPORATION · HOUSTON, TEXAS U.S.A.

Engineering	garce	**Doc. Written By**	D. Suarez	**Doc.# / Rev**	MPCF-1121/1
Engr. Date	8/21/2015	**Doc. Approved By**	M. Campbell	**Doc. Issued**	9/20/2019

Motor Connection Diagrams
6 Leads

Across the Line Starting / Run - Delta:

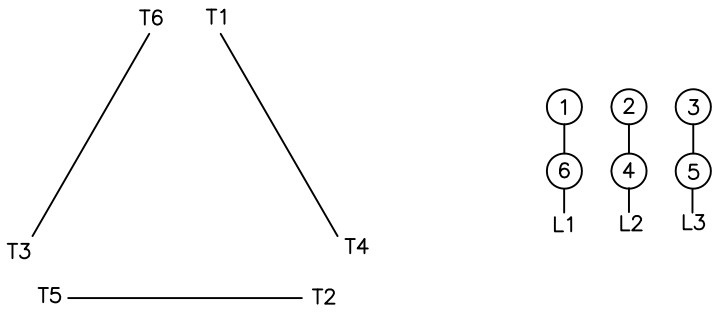

Alternate Starting Connection - Wye:

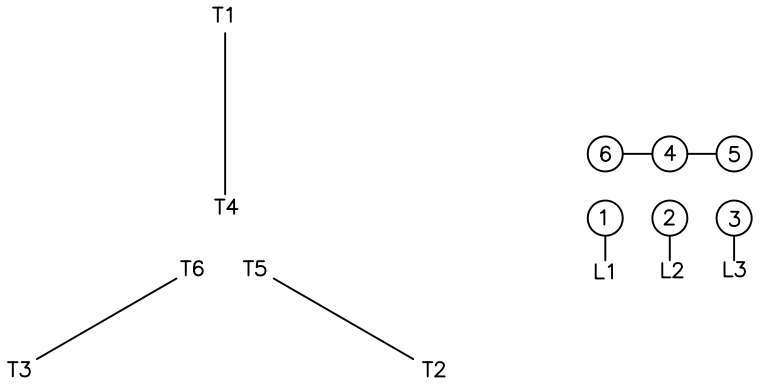

Switch L1 and L2 to reverse rotation