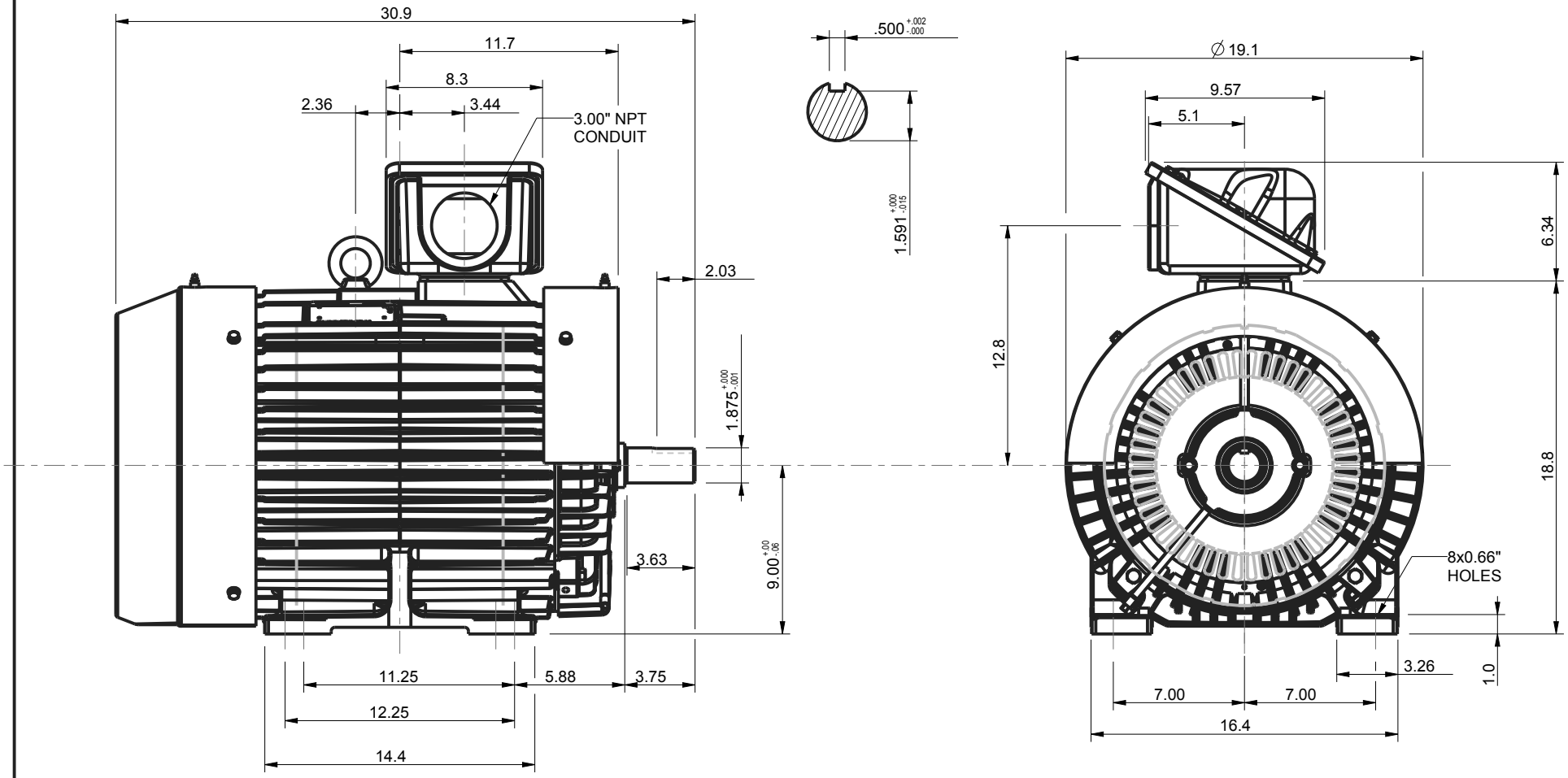


NOTES:
1. MAIN CONDUIT BOX MAY BE ROTATED IN 90° INCREMENTS
2. STANDARD PRODUCT USE BI-DIRECTIONAL FAN. OPPOSITE ROTATION AVAILABLE ONLY BY CONNECTION CHANGE.
3. KEY DIMENSIONS EQUAL 0.500" x 0.500" x 2.00" (MOTOR SUPPLIED WITH KEY)

UNITS: INCHES

TOSHIBA RESERVES THE RIGHT TO MAKE CHANGES OF TECHNICAL IMPROVEMENT WITHOUT NOTICE. DO NOT USE FOR CONSTRUCTION, INSTALLATION, OR APPLICATION PURPOSES UNLESS THE DRAWING IS CERTIFIED.

360TS TEFC FRAME
F3 ASSEMBLY

MDSLV020-07

TOLERANCES

| | |
|---|---|
| .X | .1 |
| .XX | .03 |
| .XXX | .005 |
| .XXXX | .0005 |

MAXIMUM MOTOR WEIGHT

893 lbs.
405 kgs.

| NO | REVISION | DRAWN BY | DATE | CHECK |
|---|---|---|---|---|
| 0 | FIRST ISSUE | M. O'DOWD | 02/04/14 | JR |

EQPGlobal SD
XT SERIES

DRAWN BY: M. O'DOWD
CHECK BY: J. RUSSELL
APPROVED BY:

TOSHIBA
TOSHIBA INTERNATIONAL CORPORATION

www.toshiba.com/ind

| Issued Date | 9/24/2019 | Transmit # | |
|---|---|---|---|
| Issued By | dschoeck | Issued Rev | |

TOSHIBA

# TYPICAL MOTOR PERFORMANCE DATA

**Model:** 0752SDSR41B-P3

| HP | kW | Pole | FL RPM | Frame | Voltage | Hz | Phase | FL Amps |
|---|---|---|---|---|---|---|---|---|
| 75 | 55 | 2 | 3550 | 365TS | 230/460 | 60 | 3 | 172/86 |
| **Enclosure** | **IP** | **Ins. Class** | **S.F.** | **Duty** | **NEMA Nom. Eff.** | **NEMA Design** | **kVA Code** | **Ambient (°C)** |
| TEFC | 55 | F | 1.15 | CONT | 93.6 | B | G | 40 C |

| Load | HP | kW | Amperes | Efficiency (%) | Power Factor (%) |
|---|---|---|---|---|---|
| Full Load | 75 | 55.9 | 86.0 | 93.6 | 89.3 |
| ¾ Load | 56.25 | 41.9 | 64.7 | 93.2 | 88.6 |
| ½ Load | 37.50 | 28.0 | 45.7 | 91.6 | 84.7 |
| ¼ Load | 18.75 | 14.0 | 28.9 | 86.6 | 70.1 |
| No Load | | | 21.0 | | 7.3 |
| Locked Rotor | | | 542 | | 36.3 |

| Torque | | | | Rotor wk² Inertia |
|---|---|---|---|---|
| Full Load (lb-ft) | Locked Rotor (% FLT) | Pull Up (% FLT) | Break Down (% FLT) | (lb-ft²) |
| 111 | 215 | 185 | 270 | 12.57 |

| Safe Stall Time(s) | | Sound Pressure dB(A) @ 1M | Bearings* | | Approx. Motor Weight |
|---|---|---|---|---|---|
| Cold | Hot | | DE | NDE | (lbs) |
| 35 | 15 | - | 6312ZC3 | 6312ZC3 | 887 |

*Bearings are the only recommended spare part(s).

**Motor Options:**
Product Family:EQP Global SD
Mounting:Footed,Shaft:TS Shaft

| | |
|---|---|
| **Customer** | |
| **Customer PO** | |
| **Sales Order** | |
| **Project #** | |

**Tag:**

All characteristics are average expected values.

**TOSHIBA INTERNATIONAL CORPORATION · HOUSTON, TEXAS U.S.A.**

| | | | | | |
|---|---|---|---|---|---|
| Engineering | aacosta | Doc. Written By | D. Suarez | Doc.# / Rev | MPCF-1119 / 1 |
| Engr. Date | 4/19/2012 | Doc. Approved By | M. Campbell | Doc. Issued | 9/20/2019 |

| | | | |
|---|---|---|---|
| Issued Date | 9/24/2019 | Transmit # | |
| Issued By | dschoeck | Issued Rev | |

TOSHIBA

# SPEED TORQUE/CURRENT CURVE

**Model:** 0752SDSR41B-P3

| HP | kW | Pole | FL RPM | Frame | Voltage | Hz | Phase | FL Amps |
|---|---|---|---|---|---|---|---|---|
| 75 | 55 | 2 | 3550 | 365TS | 230/460 | 60 | 3 | 172/86 |
| **Enclosure** | **IP** | **Ins. Class** | **S.F.** | **Duty** | **NEMA Nom. Eff.** | **NEMA Design** | **kVA Code** | **Ambient (°C)** |
| TEFC | 55 | F | 1.15 | CONT | 93.6 | B | G | 40 C |

| Locked Rotor Amps | Rotor wk² Inertia (lb-ft²) | Torque | | | |
|---|---|---|---|---|---|
| | | Full Load (lb-ft) | Locked Rotor (%) | Pull Up (%) | Break Down (%) |
| 542 | 12.57 | 111 | 215 | 185 | 270 |

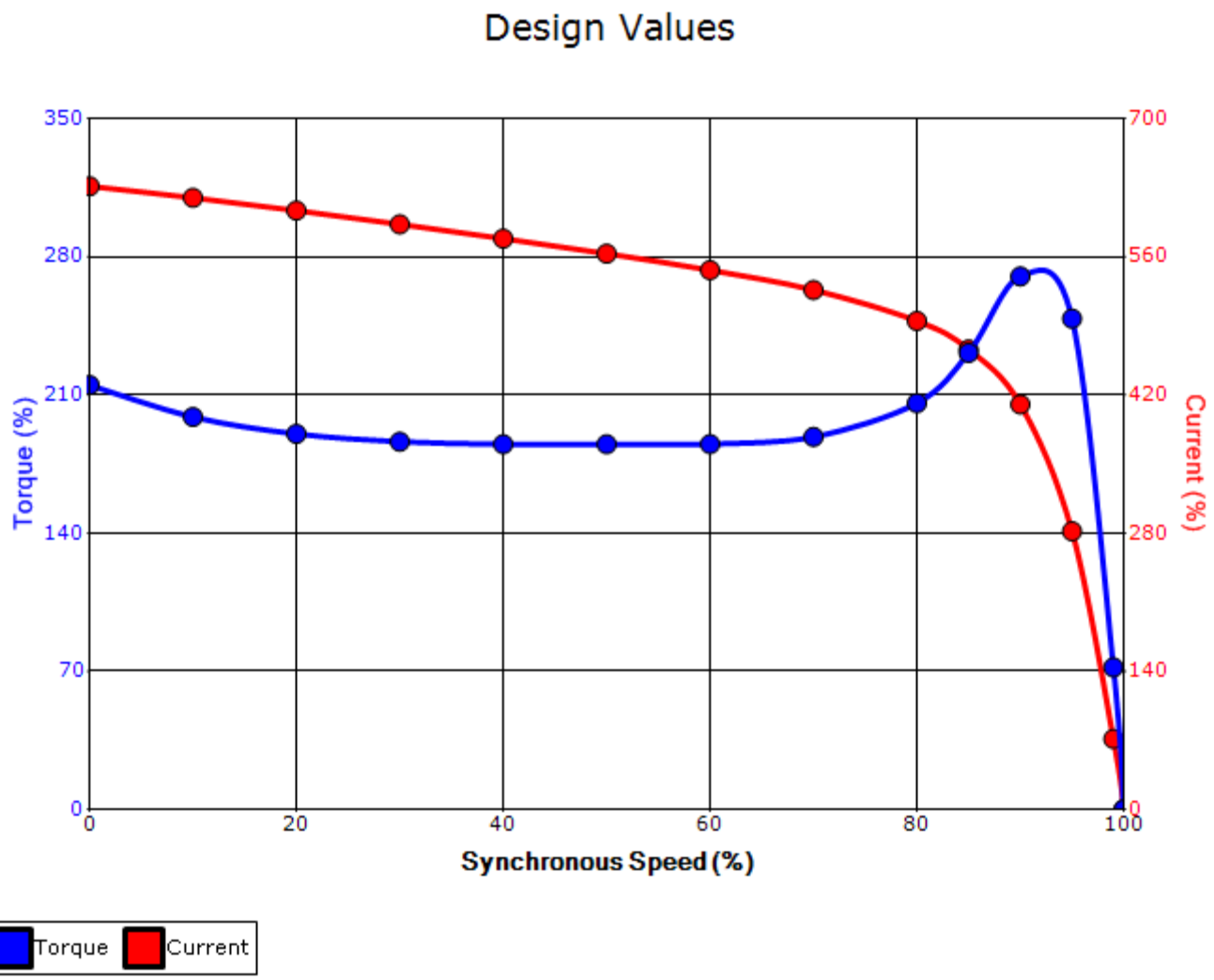


| | | | | |
|---|---|---|---|---|
| **Customer** | | | **wk² Load Inertia (lb-ft²)** | - |
| **Customer PO** | | | **Load Type** | - |
| **Sales Order** | | | **Voltage (%)** | 100 |
| **Project #** | | | **Accel. Time** | - |

**Tag:**

All characteristics are average expected values.

**TOSHIBA INTERNATIONAL CORPORATION · HOUSTON, TEXAS U.S.A.**

| | | | | | |
|---|---|---|---|---|---|
| **Engineering** | aacosta | **Doc. Written By** | D. Suarez | **Doc.# / Rev** | MPCF-1121/1 |
| **Engr. Date** | 4/19/2012 | **Doc. Approved By** | M. Campbell | **Doc. Issued** | 9/20/2019 |

# Motor Connection Diagrams
## 12 Leads

Across-the-Line Starting / Running Connections

Low Voltage Delta

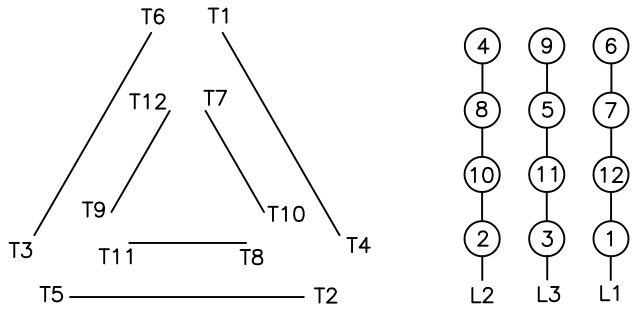


High Voltage Delta

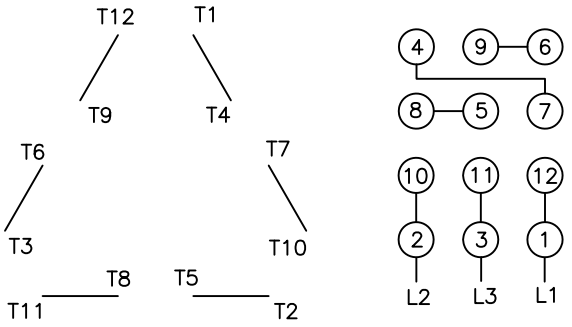


Switch L1 and L2 to reverse rotation

Suitable for Wye–Delta Starting and Limited Part–Winding–Starting.
Please Contact Toshiba International for specific connections.