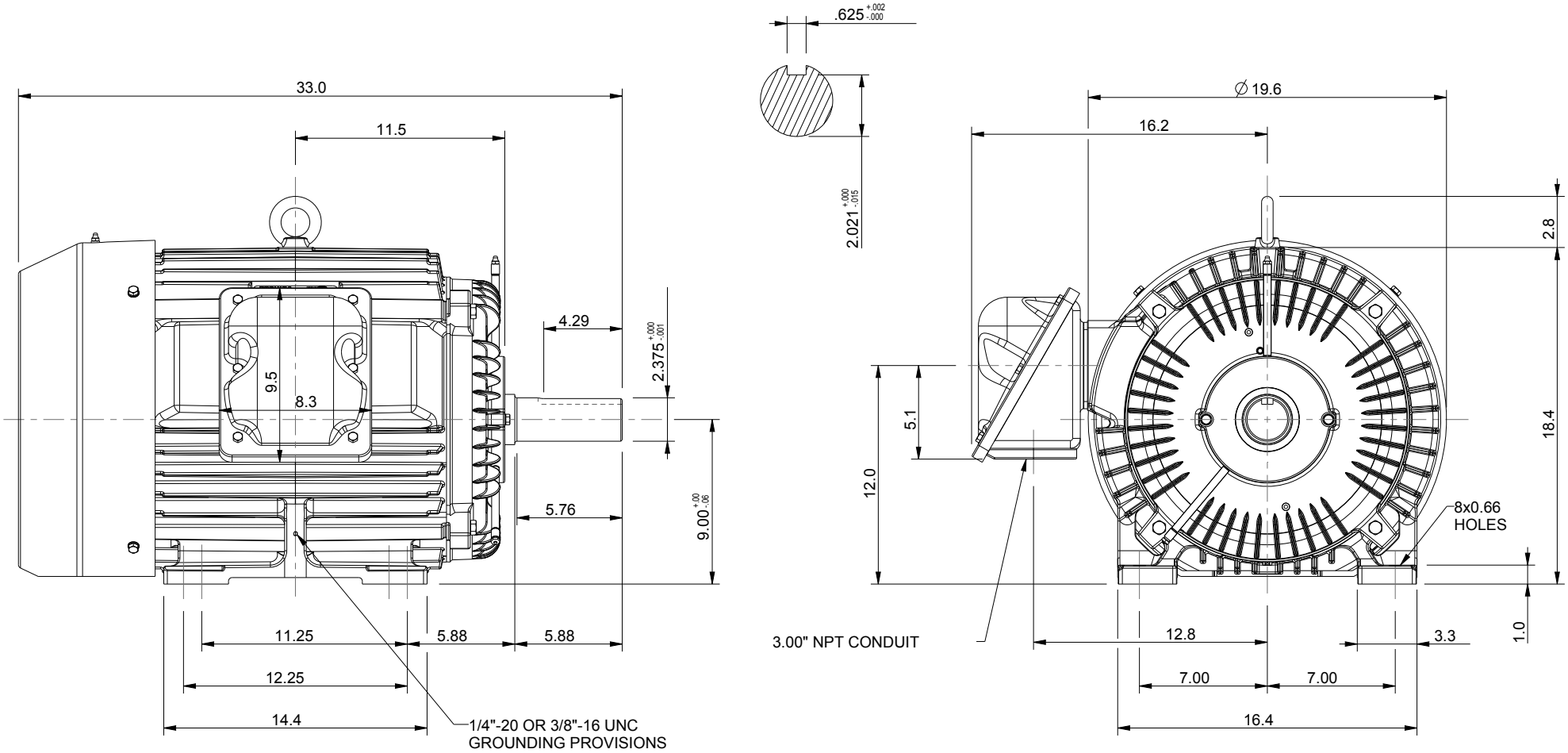

UNITS: INCHES

ROTATION FROM NDE

X CCW CW

NOTES:

1. MAIN CONDUIT BOX MAY BE ROTATED IN 90° INCREMENTS
2. STANDARD PRODUCT USES BI-DIRECTIONAL FAN. OPPOSITE ROTATION AVAILABLE ONLY BY CONNECTION CHANGE.
3. KEY DIMENSIONS EQUAL 0.625"x 0.625"x 4.25" (MOTOR SUPPLIED WITH KEY)

TOSHIBA RESERVES THE RIGHT TO MAKE CHANGES OF TECHNICAL IMPROVEMENT AND THE DATA MAY CHANGE WITHOUT NOTICE

[ ] PRELIMINARY

DO NOT USE FOR CONSTRUCTION, INSTALLATION, OR APPLICATION PURPOSES UNLESS THE DRAWING IS MARKED AS CERTIFIED

[X] CERTIFIED

TOSHIBA PETRO-CHEMICAL DUTY EQPGlobal 841

www.toshiba.com/tic

TOSHIBA INTERNATIONAL CORPORATION

TOTALLY ENCLOSED FAN COOLED
HORIZONTAL FOOT MOUNTED
3 PHASE INDUCTION MOTOR
364T-365T F1 ASSEMBLY

DRAWING #: MDSLV081-07

REV. DATE: 07/16/18 REV. #: 3 PER.: M. O'DOWD

REV. DESCRIP.:

Issued Date	1/29/2025	Transmit #	
Issued By	dschoeck	Issued Rev	

TOSHIBA
Leading Innovation >>>

TYPICAL MOTOR PERFORMANCE DATA

Model: 0754XDSB41A-P

HP	kW	Pole	FL RPM	Frame	Voltage	Hz	Phase	FL Amps
75	55	4	1780	365T	460	60	3	85
Enclosure	**IP**	**Ins. Class**	**S.F.**	**Duty**	**NEMA Nom. Eff.**	**NEMA Design**	**kVA Code**	**Ambient (°C)**
TEFC	56	F	1.15	CONT	95.4	B		40 C

Load	HP	kW	Amperes	Efficiency (%)	Power Factor (%)
Full Load	75.00	55.9	84	95.8	86.6
¾ Load	56.25	41.9	65	95.3	84.5
½ Load	37.50	28.0	47	93.6	78.4
¼ Load	18.75	14.0	32	88.5	60.2
No Load			26.6		4.3
Locked Rotor			592		26.0

Torque				Rotor wk² Inertia
Full Load (lb-ft)	Locked Rotor (% FLT)	Pull Up (% FLT)	Break Down (% FLT)	(lb-ft²)
221	170	125	290	20.46

Safe Stall Time(s)		Sound Pressure dB(A) @ 1M	Bearings*		Approx. Motor Weight
Cold	Hot		DE	NDE	(lbs)
25	13	-	6314C3	6312C3	946

*Bearings are the only recommended spare part(s).

Motor Options:
Product Family:EQP Global 841
Mounting:Footed,Shaft:T Shaft

Customer	
Customer PO	
Sales Order	
Project #	

Tag:

All characteristics are average expected values.

TOSHIBA INTERNATIONAL CORPORATION · HOUSTON, TEXAS U.S.A.

Engineering	zxie	**Doc. Written By**	D. Suarez	**Doc.# / Rev**	MPCF-1119 / 0
Engr. Date	1/27/2025	**Doc. Approved By**	M. Campbell	**Doc. Issued**	6/8/2011

Issued Date	1/29/2025	Transmit #	
Issued By	dschoeck	Issued Rev	

TOSHIBA
Leading Innovation >>>

SPEED TORQUE/CURRENT CURVE

Model: 0754XDSB41A-P

HP	kW	Pole	FL RPM	Frame	Voltage	Hz	Phase	FL Amps
75	55	4	1780	365T	460	60	3	85
Enclosure	**IP**	**Ins. Class**	**S.F.**	**Duty**	**NEMA Nom. Eff.**	**NEMA Design**	**kVA Code**	**Ambient (°C)**
TEFC	56	F	1.15	CONT	95.4	B		40 C

Locked Rotor Amps	Rotor wk² Inertia (lb-ft²)	Torque			
		Full Load (lb-ft)	Locked Rotor (%)	Pull Up (%)	Break Down (%)
592	20.46	221	170	125	290

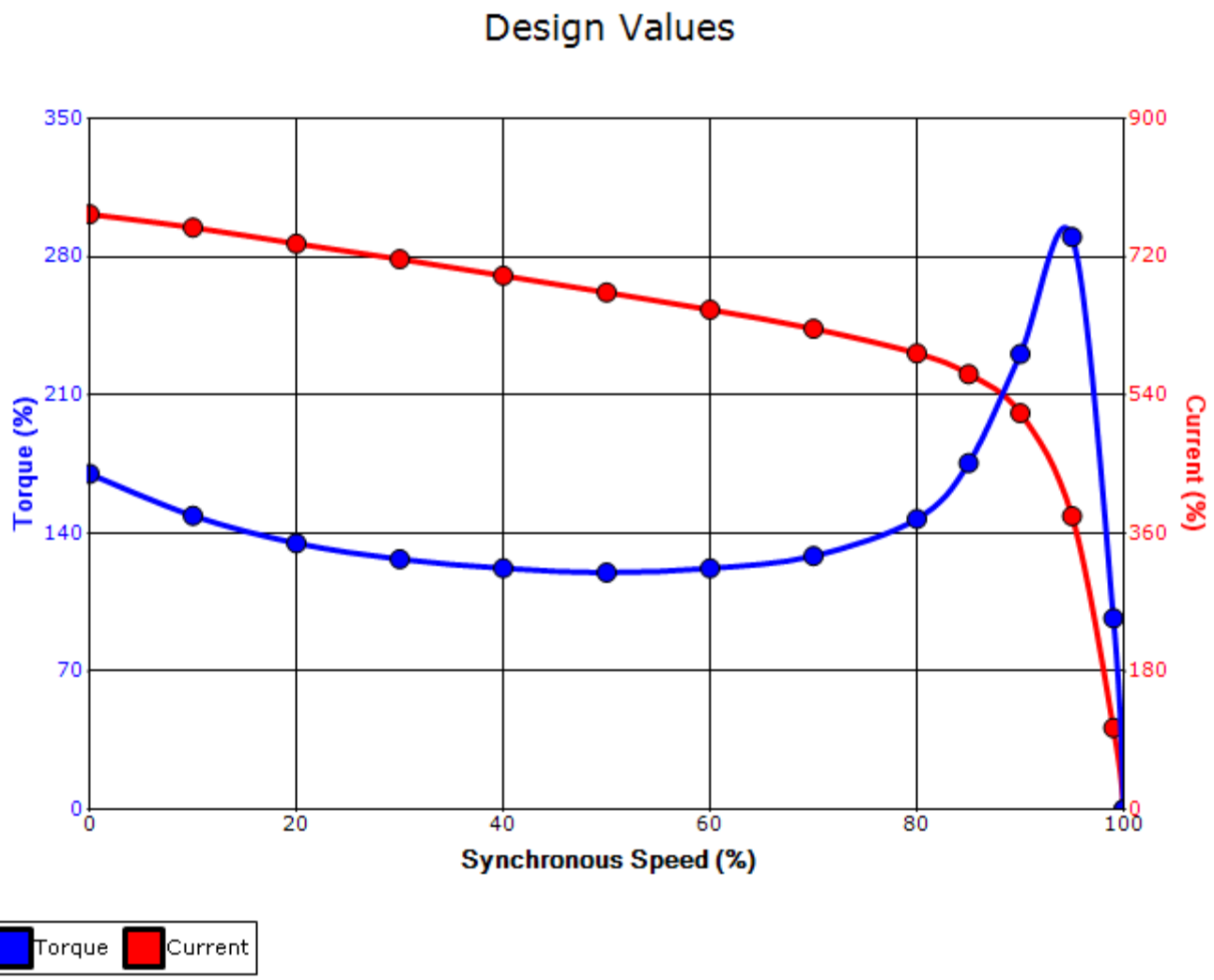

Customer			**wk² Load Inertia (lb-ft²)**	-
Customer PO			**Load Type**	-
Sales Order			**Voltage (%)**	100
Project #			**Accel. Time**	-

Tag:

All characteristics are average expected values.

TOSHIBA INTERNATIONAL CORPORATION · HOUSTON, TEXAS U.S.A.

Engineering	zxie	**Doc. Written By**	D. Suarez	**Doc.# / Rev**	MPCF-1121 / 0
Engr. Date	1/27/2025	**Doc. Approved By**	M. Campbell	**Doc. Issued**	6/8/2011

Motor Connection Diagram
3 Leads - Delta Connection

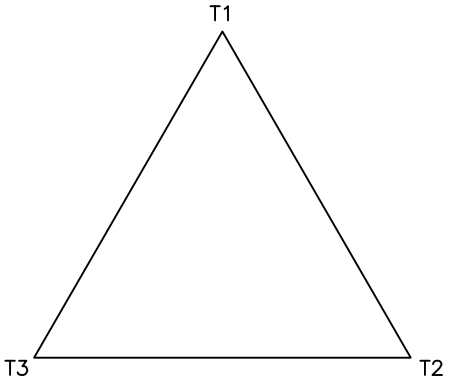

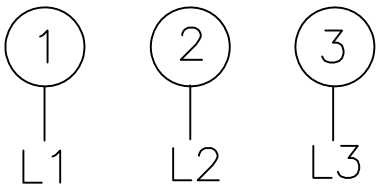

Switch L1 and L2 to reverse rotation

Each lead may consist of more than one cable.
If multiple cables represent a single lead, each one of them will be labeled with the appropriate lead number.