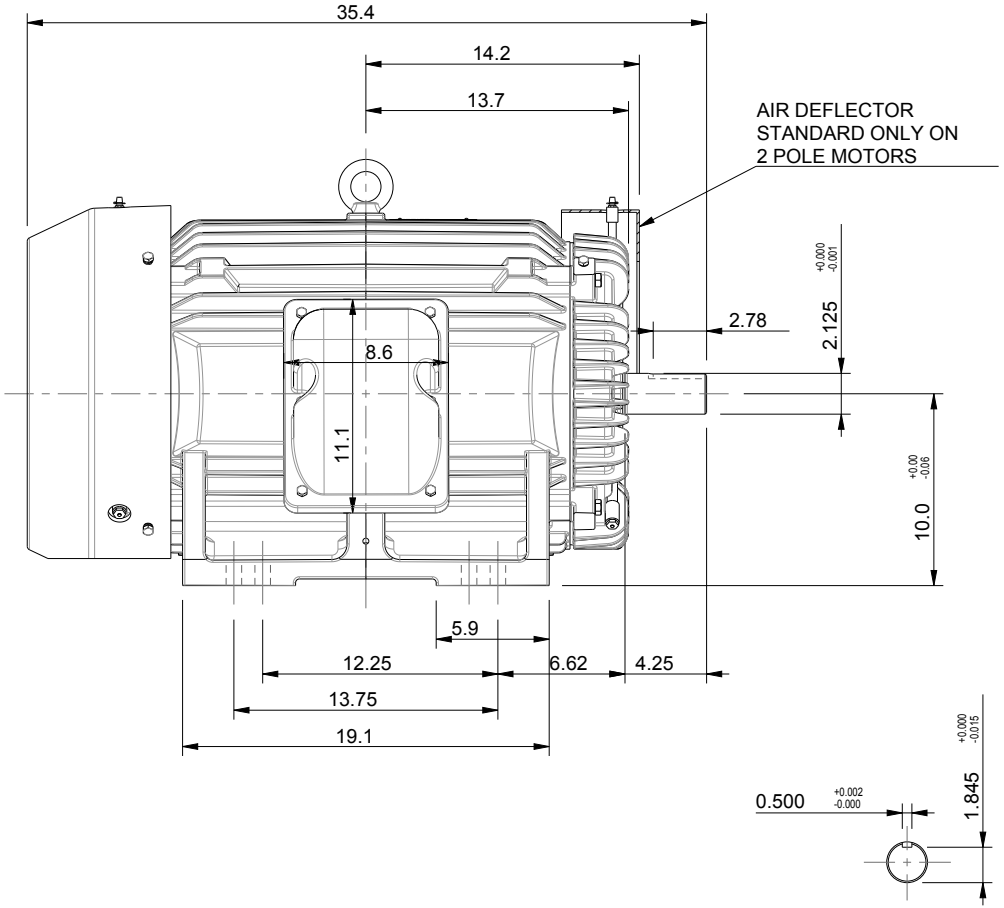

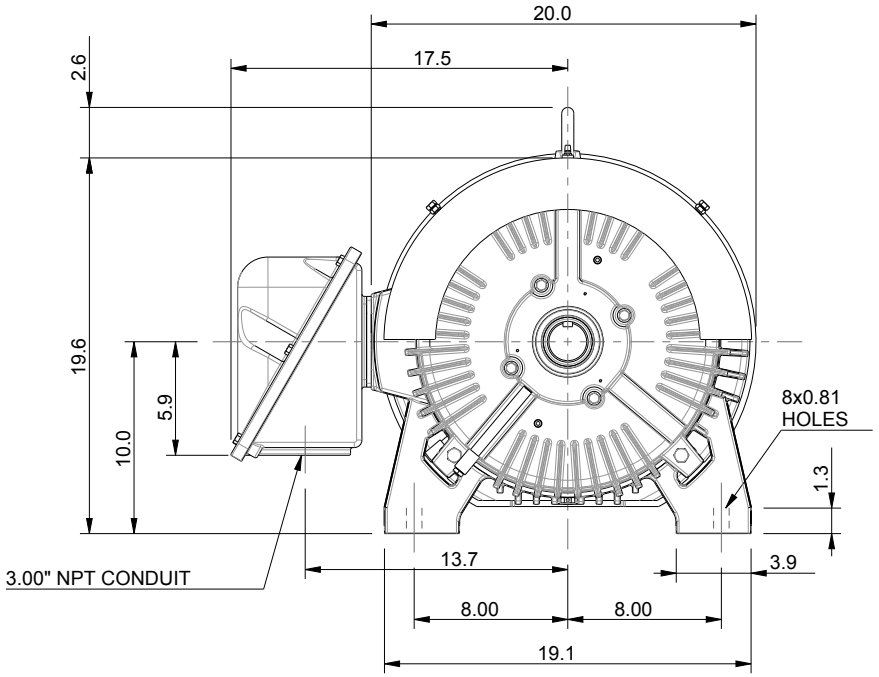

UNITS: INCHES		NOTES:
ROTATION FROM NDE		1. MAIN CONDUIT BOX MAY BE ROTATED IN 90° INCREMENTS
X CCW	CW	2. STANDARD PRODUCT USES BI-DIRECTIONAL FAN. OPPOSITE ROTATION AVAILABLE ONLY BY CONNECTION CHANGE.
		3. KEY DIMENSIONS EQUAL 0.50x0.50x2.75 (MOTOR SUPPLIED WITH KEY)

TOSHIBA RESERVES THE RIGHT TO MAKE CHANGES OF TECHNICAL IMPROVEMENT AND THE DATA MAY CHANGE WITHOUT NOTICE — [ ] PRELIMINARY

DO NOT USE FOR CONSTRUCTION, INSTALLATION, OR APPLICATION PURPOSES UNLESS THE DRAWING IS MARKED AS CERTIFIED — [X] CERTIFIED

TOSHIBA MILL & CHEMICAL DUTY EQP Global 840

www.toshiba.com/tic

TOSHIBA INTERNATIONAL CORPORATION

TOTALLY ENCLOSED FAN COOLED
HORIZONTAL FAN MOUNT
3 PHASE INDUCTION MOTOR
404TS/405TS F1 ASSEMBLY

DRAWING #: MDSLV042-08

REV. DATE: 05/21/21 REV. #: 4 PER.: J. HOCK

REV. DESCRIP.: ADDED NOTE FOR AIR DEFLECTOR

Issued Date	9/26/2022	Transmit #	
Issued By	dschoeck	Issued Rev	

TOSHIBA
Leading Innovation >>>

TYPICAL MOTOR PERFORMANCE DATA

Model: 1002XSSB41B-P

HP	kW	Pole	FL RPM	Frame	Voltage	Hz	Phase	FL Amps
100	75	2	3560	405TS	460	60	3	112
Enclosure	**IP**	**Ins. Class**	**S.F.**	**Duty**	**NEMA Nom. Eff.**	**NEMA Design**	**kVA Code**	**Ambient (°C)**
TEFC	56	F	1.15	CONT	94.1	B		40 C

Load	HP	kW	Amperes	Efficiency (%)	Power Factor (%)
Full Load	100.00	74.6	112	94.6	88.0
¾ Load	75.00	55.9	86	93.9	86.6
½ Load	50.00	37.3	61	91.9	82.2
¼ Load	25.00	18.6	40	85.8	66.9
No Load			27.0		
Locked Rotor			711		31.6

Torque				Rotor wk² Inertia
Full Load (lb-ft)	Locked Rotor (% FLT)	Pull Up (% FLT)	Break Down (% FLT)	(lb-ft²)
148	195	125	245	17.36

Safe Stall Time(s)		Sound Pressure dB(A) @ 1M	Bearings*		Approx. Motor Weight (lbs)
Cold	Hot		DE	NDE	
15	6	85	6313C3	6313C3	

*Bearings are the only recommended spare part(s).

Motor Options:
Product Family:EQP Global 840
Mounting:Footed,Shaft:TS Shaft

Customer	
Customer PO	
Sales Order	
Project #	

Tag:

All characteristics are average expected values.

TOSHIBA INTERNATIONAL CORPORATION · HOUSTON, TEXAS U.S.A.

Engineering	bmammen	**Doc. Written By**	D. Suarez	**Doc.# / Rev**	MPCF-1119 / 0
Engr. Date	10/18/2018	**Doc. Approved By**	M. Campbell	**Doc. Issued**	6/8/2011

Issued Date	9/26/2022	Transmit #	
Issued By	dschoeck	Issued Rev	

TOSHIBA
Leading Innovation >>>

SPEED TORQUE/CURRENT CURVE

Model: 1002XSSB41B-P

HP	kW	Pole	FL RPM	Frame	Voltage	Hz	Phase	FL Amps
100	75	2	3560	405TS	460	60	3	112
Enclosure	**IP**	**Ins. Class**	**S.F.**	**Duty**	**NEMA Nom. Eff.**	**NEMA Design**	**kVA Code**	**Ambient (°C)**
TEFC	56	F	1.15	CONT	94.1	B		40 C

Locked Rotor Amps	Rotor wk² Inertia (lb-ft²)	Torque			
		Full Load (lb-ft)	Locked Rotor (%)	Pull Up (%)	Break Down (%)
711	17.36	148	195	125	245

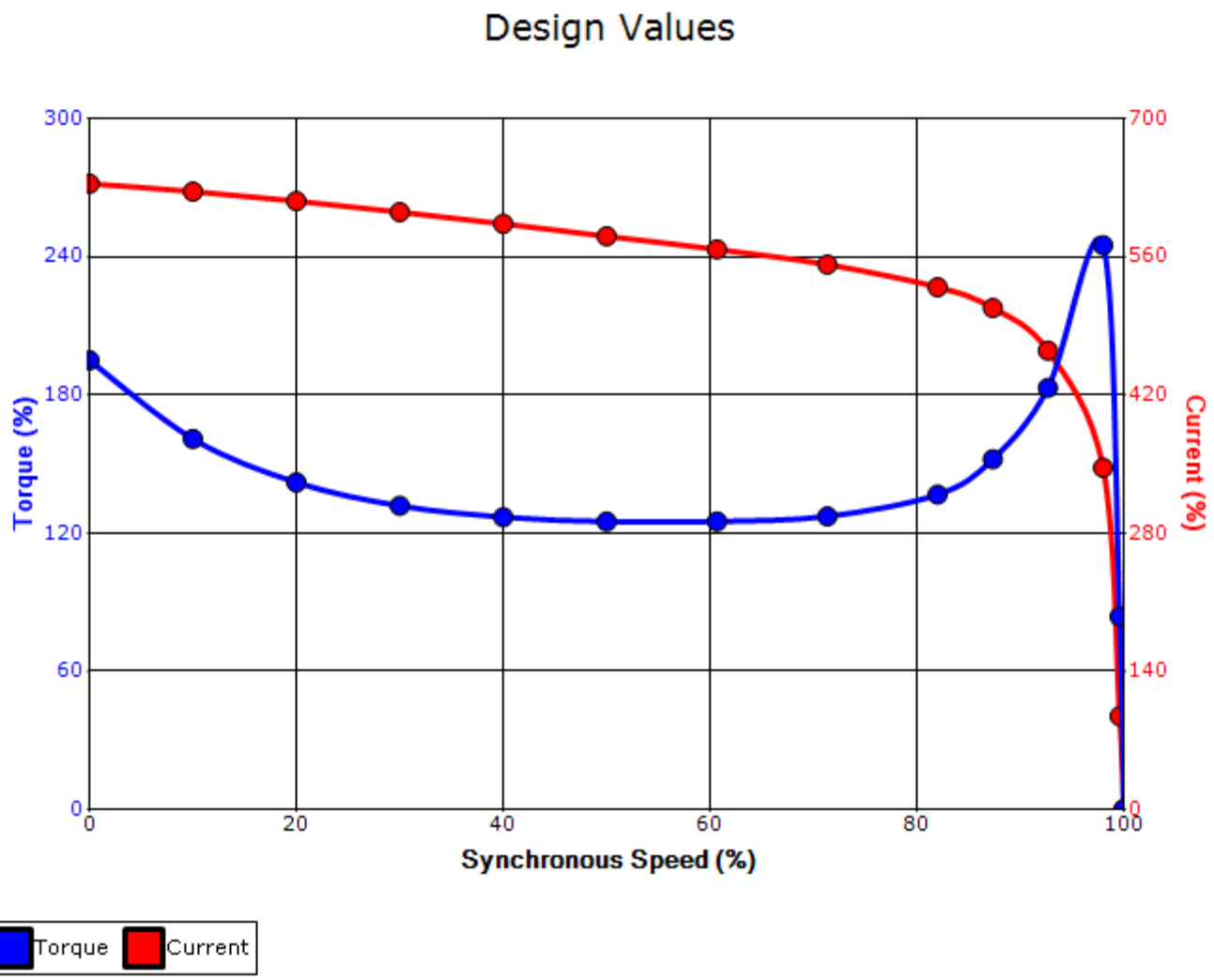

Customer			**wk² Load Inertia (lb-ft²)**	-
Customer PO			**Load Type**	-
Sales Order			**Voltage (%)**	100
Project #			**Accel. Time**	-

Tag:

All characteristics are average expected values.

TOSHIBA INTERNATIONAL CORPORATION · HOUSTON, TEXAS U.S.A.

Engineering	bmammen	**Doc. Written By**	D. Suarez	**Doc.# / Rev**	MPCF-1121 / 0
Engr. Date	10/18/2018	**Doc. Approved By**	M. Campbell	**Doc. Issued**	6/8/2011

Motor Connection Diagram
3 Leads - Delta Connection

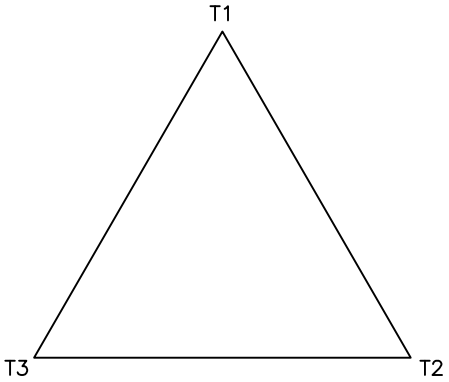

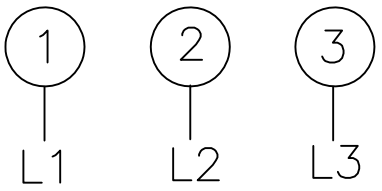

Switch L1 and L2 to reverse rotation

Each lead may consist of more than one cable.
If multiple cables represent a single lead, each one of them will be labeled with the appropriate lead number.