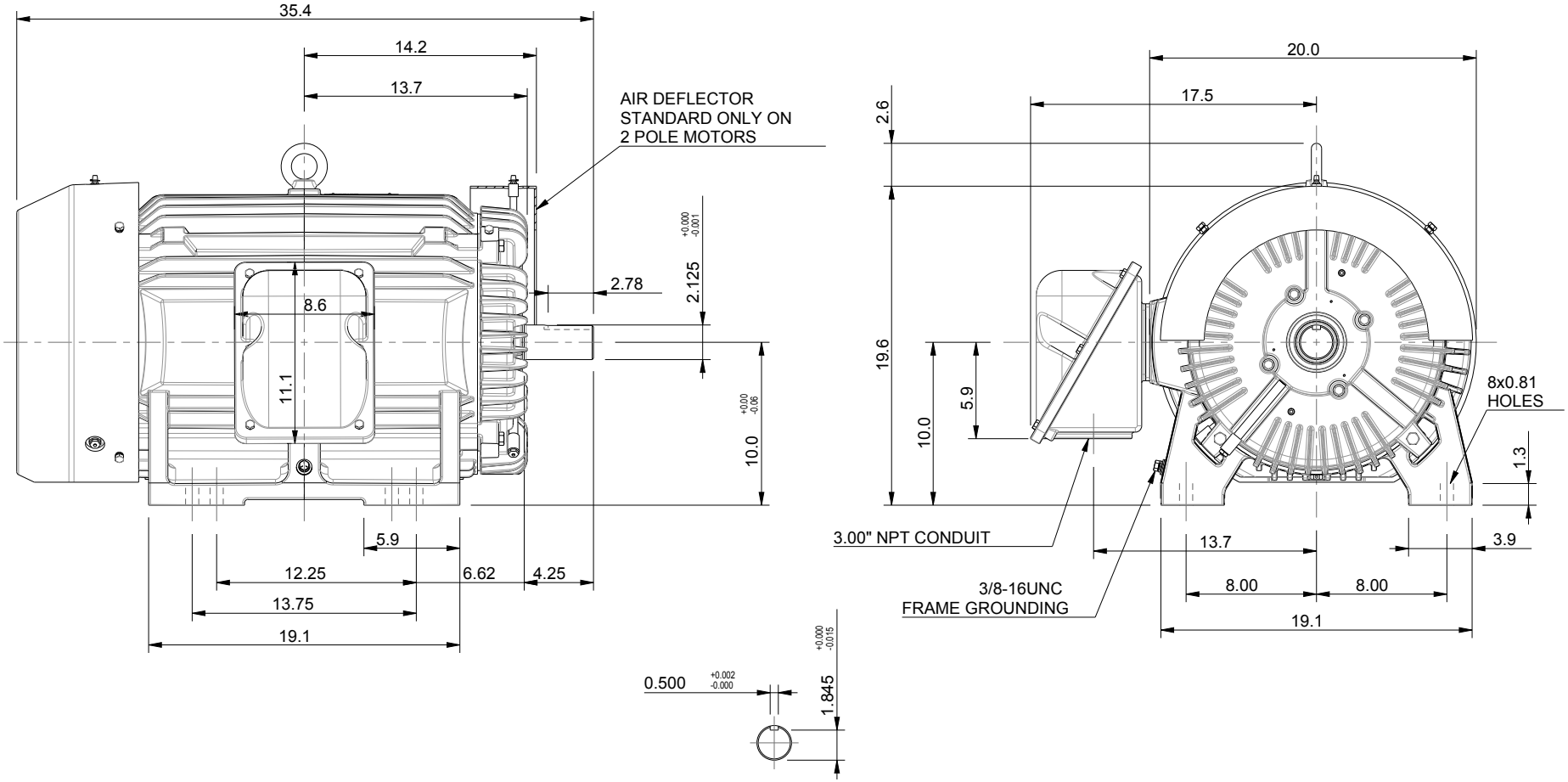

UNITS: INCHES	NOTES:
ROTATION FROM NDE	1. MAIN CONDUIT BOX MAY BE ROTATED IN 90° INCREMENTS
X CCW / CW	2. STANDARD PRODUCT USES BI-DIRECTIONAL FAN. OPPOSITE ROTATION AVAILABLE ONLY BY CONNECTION CHANGE.
	3. KEY DIMENSIONS EQUAL 0.50x0.50x2.75 (MOTOR SUPPLIED WITH KEY)

TOSHIBA RESERVES THE RIGHT TO MAKE CHANGES OF TECHNICAL IMPROVEMENT AND THE DATA MAY CHANGE WITHOUT NOTICE — [ ] PRELIMINARY

DO NOT USE FOR CONSTRUCTION, INSTALLATION, OR APPLICATION PURPOSES UNLESS THE DRAWING IS MARKED AS CERTIFIED — [X] CERTIFIED

TOSHIBA PETRO-CHEMICAL DUTY EQPGlobal 841

www.toshiba.com/tic

TOSHIBA INTERNATIONAL CORPORATION

TOTALLY ENCLOSED FAN COOLED
HORIZONTAL FOOT MOUNT
3 PHASE INDUCTION MOTOR
404TS/405TS F1 ASSEMBLY

DRAWING #: MDSLV082-08

REV. DATE: 05/21/21 REV. #: 4 PER.: J. HOCK

REV. DESCRIP.: ADDED AIR DEFLECTOR NOTE

Issued Date	12/19/2024	Transmit #	
Issued By	dschoeck	Issued Rev	

TOSHIBA
Leading Innovation >>>

TYPICAL MOTOR PERFORMANCE DATA

Model: 1004XDSC41B-P

HP	kW	Pole	FL RPM	Frame	Voltage	Hz	Phase	FL Amps
100	75	4	1780	405TS	575	60	3	96
Enclosure	**IP**	**Ins. Class**	**S.F.**	**Duty**	**NEMA Nom. Eff.**	**NEMA Design**	**kVA Code**	**Ambient (°C)**
TEFC	56	F	1.15	CONT	95.4	B		40 C

Load	HP	kW	Amperes	Efficiency (%)	Power Factor (%)
Full Load	100.00	74.6	95	95.6	82.1
¾ Load	75.00	55.9	76	95.1	77.7
½ Load	50.00	37.3	58	93.6	68.0
¼ Load	25.00	18.6	45	88.6	46.0
No Load			39.2		3.5
Locked Rotor			580		40.6

Torque				Rotor wk² Inertia
Full Load (lb-ft)	Locked Rotor (% FLT)	Pull Up (% FLT)	Break Down (% FLT)	(lb-ft²)
295	275	195	325	25.95

Safe Stall Time(s)		Sound Pressure dB(A) @ 1M	Bearings*		Approx. Motor Weight (lbs)
Cold	Hot		DE	NDE	
14	9	75	6313C3	6313C3	

*Bearings are the only recommended spare part(s).

Motor Options:
Product Family:EQP Global 841
Mounting:Footed,Shaft:TS Shaft

Customer	
Customer PO	
Sales Order	
Project #	

Tag:

All characteristics are average expected values.

TOSHIBA INTERNATIONAL CORPORATION · HOUSTON, TEXAS U.S.A.

Engineering	Jrodrigu	Doc. Written By	D. Suarez	Doc.# / Rev	MPCF-1119 / 0
Engr. Date	7/25/2024	Doc. Approved By	M. Campbell	Doc. Issued	6/8/2011

Issued Date	12/19/2024	Transmit #	
Issued By	dschoeck	Issued Rev	

TOSHIBA
Leading Innovation >>>

SPEED TORQUE/CURRENT CURVE

Model: 1004XDSC41B-P

HP	kW	Pole	FL RPM	Frame	Voltage	Hz	Phase	FL Amps
100	75	4	1780	405TS	575	60	3	96
Enclosure	**IP**	**Ins. Class**	**S.F.**	**Duty**	**NEMA Nom. Eff.**	**NEMA Design**	**kVA Code**	**Ambient (°C)**
TEFC	56	F	1.15	CONT	95.4	B		40 C

Locked Rotor Amps	Rotor wk² Inertia (lb-ft²)	Torque			
		Full Load (lb-ft)	Locked Rotor (%)	Pull Up (%)	Break Down (%)
580	25.95	295	275	195	325

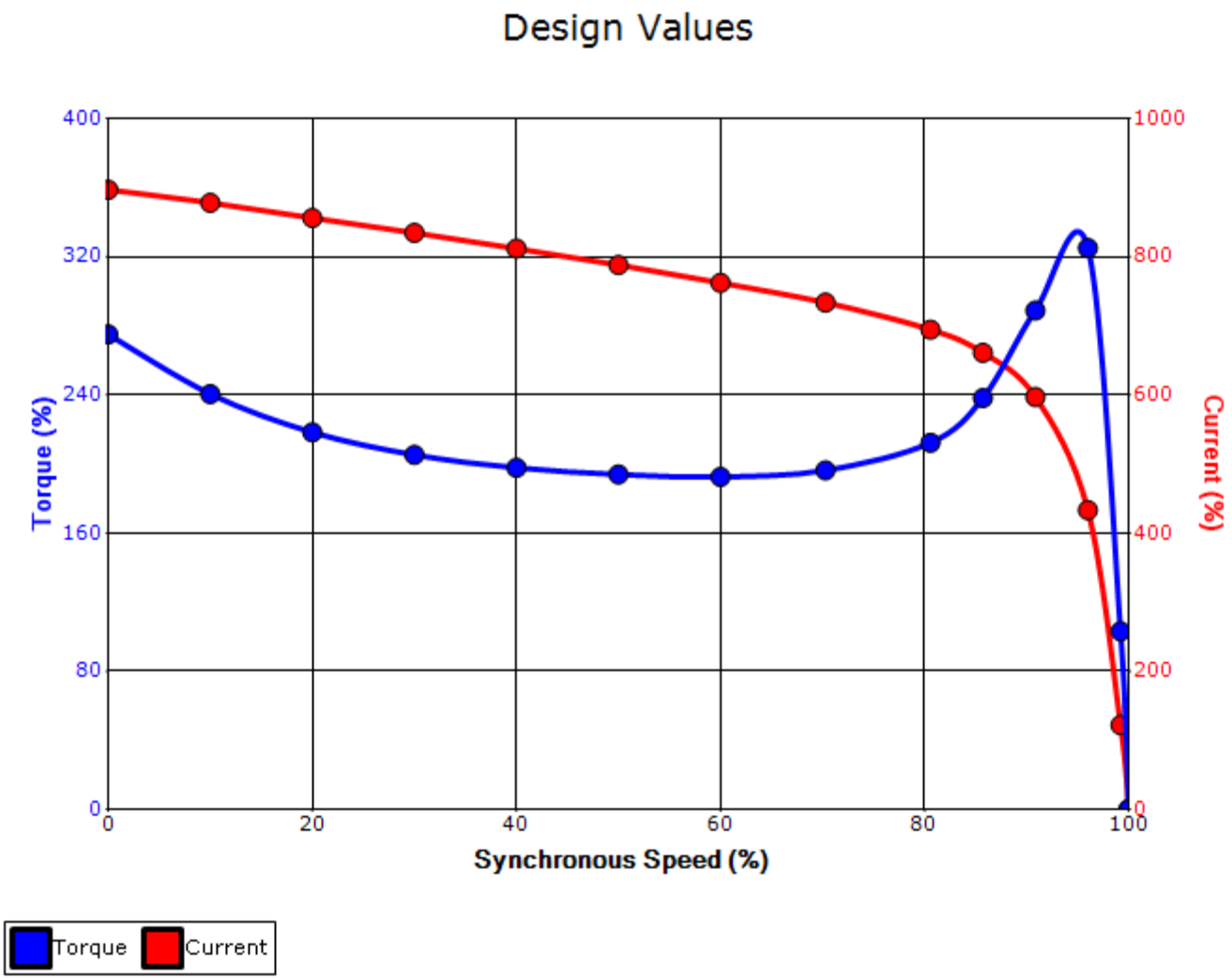

Customer			**wk² Load Inertia (lb-ft²)**	-
Customer PO			**Load Type**	-
Sales Order			**Voltage (%)**	100
Project #			**Accel. Time**	-

Tag:

All characteristics are average expected values.

TOSHIBA INTERNATIONAL CORPORATION · HOUSTON, TEXAS U.S.A.

Engineering	Jrodrigu	**Doc. Written By**	D. Suarez	**Doc.# / Rev**	MPCF-1121 / 0
Engr. Date	7/25/2024	**Doc. Approved By**	M. Campbell	**Doc. Issued**	6/8/2011

Motor Connection Diagram
3 Leads - Delta Connection

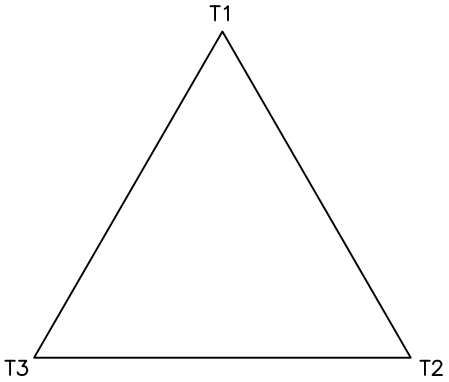

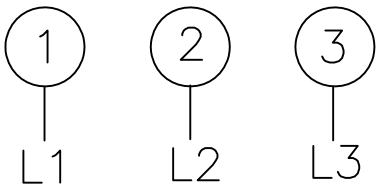

Switch L1 and L2 to reverse rotation

Each lead may consist of more than one cable.
If multiple cables represent a single lead, each one of them will be labeled with the appropriate lead number.