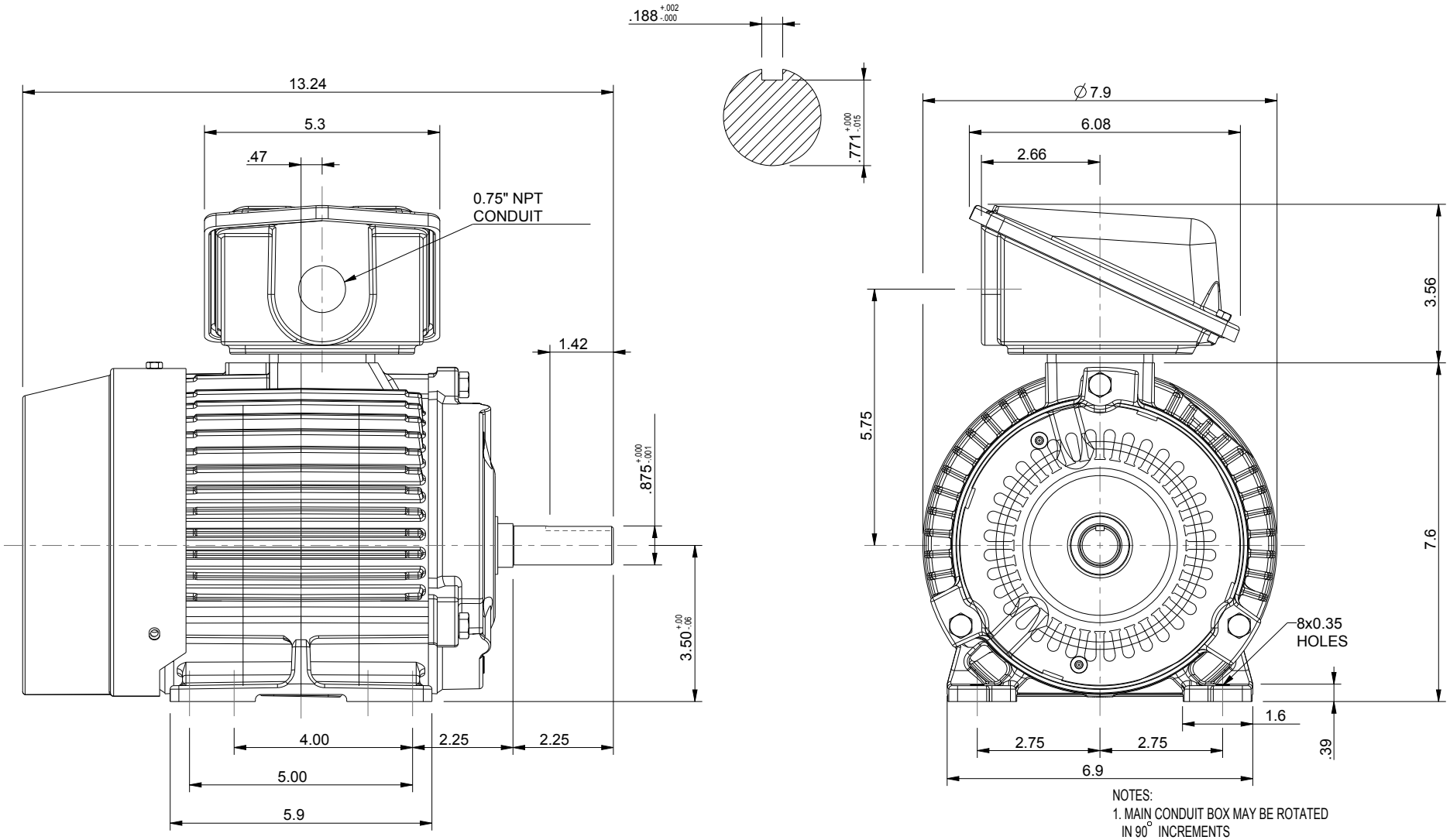

NOTES:
1. MAIN CONDUIT BOX MAY BE ROTATED IN 90° INCREMENTS
2. STANDARD PRODUCT USE BI-DIRECTIONAL FAN. OPPOSITE ROTATION AVAILABLE ONLY BY CONNECTION CHANGE.
3. KEY DIMENSIONS EQUAL 0.188" x 0.188" x 1.38" (MOTOR SUPPLIED WITH KEY)

UNITS: INCHES

TOSHIBA RESERVES THE RIGHT TO MAKE CHANGES OF TECHNICAL IMPROVEMENT WITHOUT NOTICE. DO NOT USE FOR CONSTRUCTION, INSTALLATION, OR APPLICATION PURPOSES UNLESS THE DRAWING IS CERTIFIED.

140T TEFC FRAME
F3 ASSEMBLY

MDSLV019-01

TOSHIBA
TOSHIBA INTERNATIONAL CORPORATION

TOLERANCES	
.X	.1
.XX	.03
.XXX	.005
.XXXX	.0005

MAXIMUM MOTOR WEIGHT
56 lbs.
25 kgs.

NO	REVISION	DRAWN BY	DATE	CHECK
1	CHANGE PLACEMENT OF T-BOX	MO	03/21/14	JR
0	FIRST ISSUE	M. EASTERBROOK	04/23/13	JR

EQPGlobal SD
XT SERIES

DRAWN BY: M. EASTERBROOK
CHECK BY: J. RUSSELL
APPROVED BY:

www.toshiba.com/ind

Issued Date	12/19/2024	Transmit #	
Issued By	dschoeck	Issued Rev	

TOSHIBA
Leading Innovation >>>

TYPICAL MOTOR PERFORMANCE DATA

Model: Y152SDSR41A-P3

HP	kW	Pole	FL RPM	Frame	Voltage	Hz	Phase	FL Amps
1.50	1.1	2	3525	143T	230/460	60	3	4.2/2.1
Enclosure	**IP**	**Ins. Class**	**S.F.**	**Duty**	**NEMA Nom. Eff.**	**NEMA Design**	**kVA Code**	**Ambient (°C)**
TEFC	55	F	1.15	CONT	84.0	B		40 C

Load	HP	kW	Amperes	Efficiency (%)	Power Factor (%)
Full Load	1.50	1.1	2.1	86.5	78.7
¾ Load	1.13	0.8	1.7	84.0	71.0
½ Load	0.75	0.6	1.5	78.4	58.4
¼ Load	0.38	0.3	0.8	71.2	58.4
No Load			1.1		10.3
Locked Rotor			19.8		54.1

Torque				Rotor wk² Inertia
Full Load (lb-ft)	Locked Rotor (% FLT)	Pull Up (% FLT)	Break Down (% FLT)	(lb-ft²)
2.24	330	225	320	0.06

Safe Stall Time(s)		Sound Pressure dB(A) @ 1M	Bearings*		Approx. Motor Weight
Cold	Hot		DE	NDE	(lbs)
31	15	-	6305ZZC3	6305ZZC3	50

*Bearings are the only recommended spare part(s).

Motor Options:
Mounting:Footed,Shaft:T Shaft

Customer	
Customer PO	
Sales Order	
Project #	

Tag:

All characteristics are average expected values.

TOSHIBA INTERNATIONAL CORPORATION · HOUSTON, TEXAS U.S.A.

Engineering	aguerrettaz	**Doc. Written By**	D. Suarez	**Doc.# / Rev**	MPCF-1119 / 0
Engr. Date	8/2/2024	**Doc. Approved By**	M. Campbell	**Doc. Issued**	6/8/2011

Issued Date	12/19/2024	Transmit #	
Issued By	dschoeck	Issued Rev	

TOSHIBA
Leading Innovation >>>

SPEED TORQUE/CURRENT CURVE

Model: Y152SDSR41A-P3

HP	kW	Pole	FL RPM	Frame	Voltage	Hz	Phase	FL Amps
1.50	1.1	2	3525	143T	230/460	60	3	4.2/2.1
Enclosure	**IP**	**Ins. Class**	**S.F.**	**Duty**	**NEMA Nom. Eff.**	**NEMA Design**	**kVA Code**	**Ambient (°C)**
TEFC	55	F	1.15	CONT	84.0	B		40 C

Locked Rotor Amps	Rotor wk² Inertia (lb-ft²)	Torque			
		Full Load (lb-ft)	Locked Rotor (%)	Pull Up (%)	Break Down (%)
19.8	0.06	2.24	330	225	320

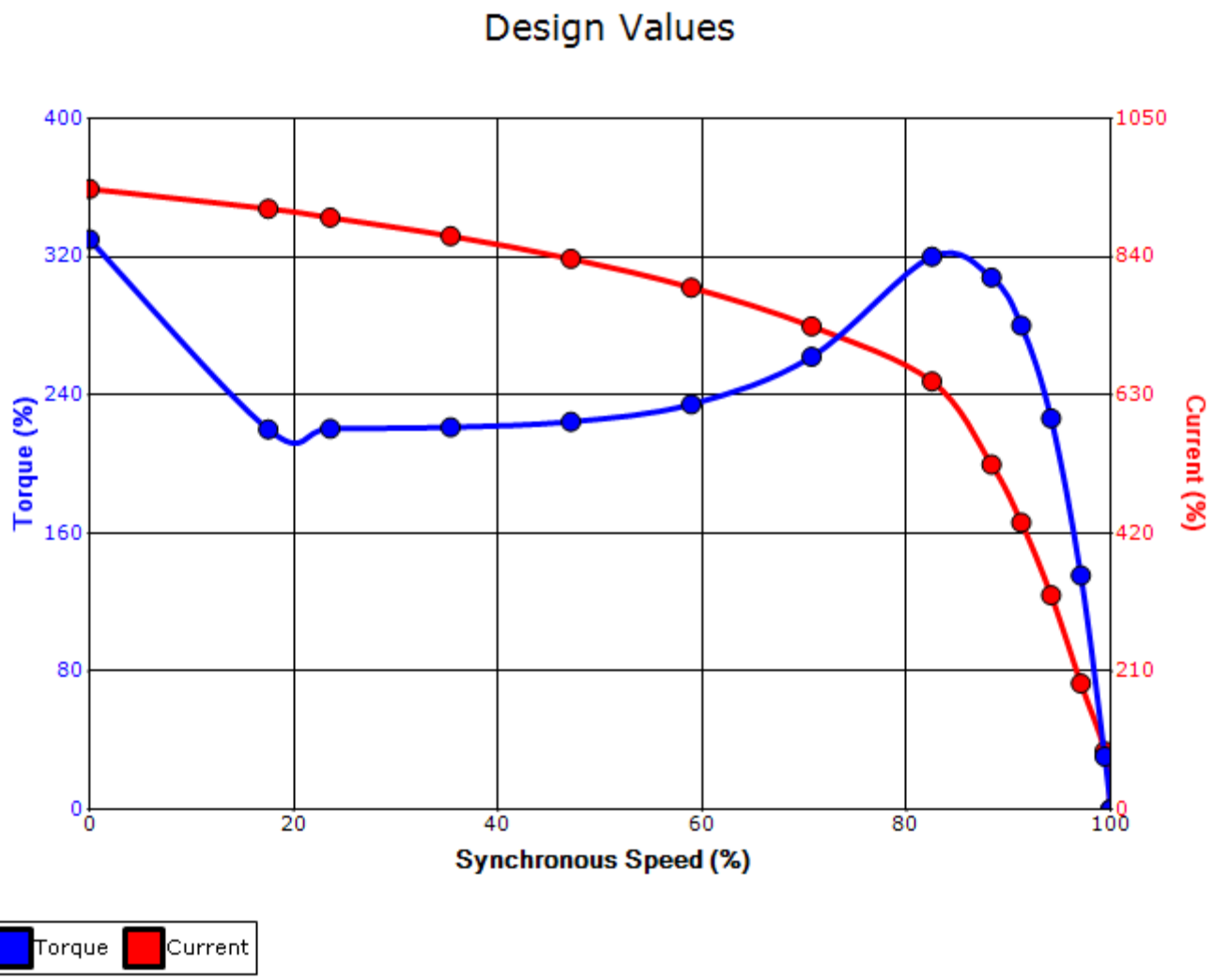

Customer			**wk² Load Inertia (lb-ft²)**	-
Customer PO			**Load Type**	-
Sales Order			**Voltage (%)**	100
Project #			**Accel. Time**	-

Tag:

All characteristics are average expected values.

TOSHIBA INTERNATIONAL CORPORATION · HOUSTON, TEXAS U.S.A.

Engineering	aguerrettaz	**Doc. Written By**	D. Suarez	**Doc.# / Rev**	MPCF-1121 / 0
Engr. Date	8/2/2024	**Doc. Approved By**	M. Campbell	**Doc. Issued**	6/8/2011

Motor Connection Diagrams
9 Leads

Across-the-Line Starting / Running Connections

Low Voltage Wye

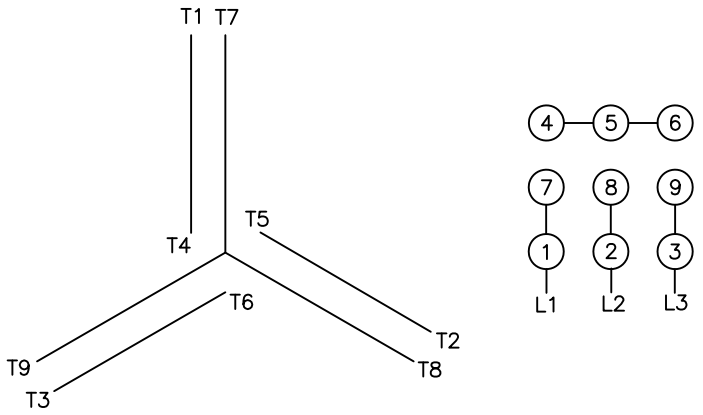

High Voltage Wye

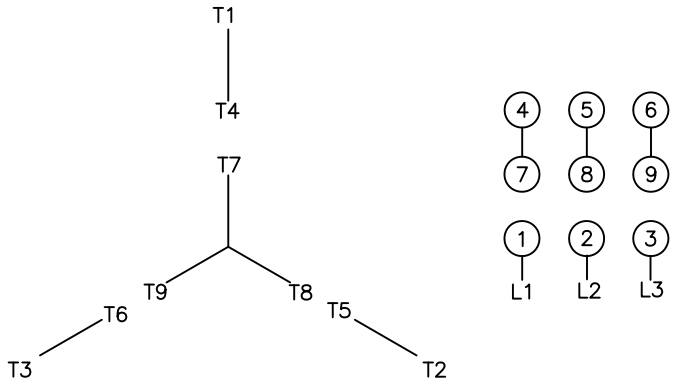

Switch L1 and L2 to reverse rotation